Commercial Dryers

Metered and Nonmetered ZE and ZG Models

Refer to Page 3 for Model Numbers

Parts

Alliance Laundry Systems

www.comlaundry.com

Part No. 511462R1
November 2005

Table of Contents

Title	Page
Parts Ordering Information	2
Nameplate Location	2
Model Identification	3
Service Door and Meter Case	4
Timer, Plate, Case and Knob	6
Accumulator - Metered Models Except Audit Models	8
Accumulator - Metered Audit Models	10
Control Panel, Control Hood and Controls - Nonmetered and Coin Slide Models	12
Control Panel, Control Hood and Controls - Card Reader Models	14
Cabinet Top	16
Loading Door, Front Panels and Access Door	18
Front Bulkhead, Air Duct, Felt Seal and Cylinder	20
Rear Bulkhead, Felt Seal and Cylinder Roller	22
Motor, Exhaust Fan and Belt	24
Cabinet, Exhaust Duct and Base	26
Terminal Block - Electric Models without Power Cord Through Serial No. S6270865XG	28
Terminal Block - Electric Models with Power Cord Through Serial No. S6270865XG	30
Terminal Block - Electric Models without Power Cord Starting Serial No. S6270866XG	32
Terminal Block - Electric Models with Power Cord Starting Serial No. S6270866XG	34
Heater Duct - Electric Models Through Serial No. S6270865XG	36
Heater Duct - Electric Models Starting Serial No. S6270866XG	38
Heater Duct - Gas Models	40
Gas Valve, Igniter and Gas Conversion Kits	42
Power Cord and Terminals	44
Wire Harnesses and Wires	46
Parts Index	47

© Copyright 2005, Alliance Laundry Systems LLC

All rights reserved. No part of the contents of this book may be reproduced or transmitted in any form or by any means without the expressed written consent of the publisher.

Parts Ordering Information

If literature or replacement parts are required, contact the source from whom the machine was purchased or contact Alliance Laundry Systems at (920) 748-3950 for the name and address of the nearest authorized parts distributor.

For technical assistance, call (920) 748-3121.

Nameplate Location

When calling or writing about your product, be sure to mention model and serial numbers. Model and serial numbers are located on nameplate(s) as shown.

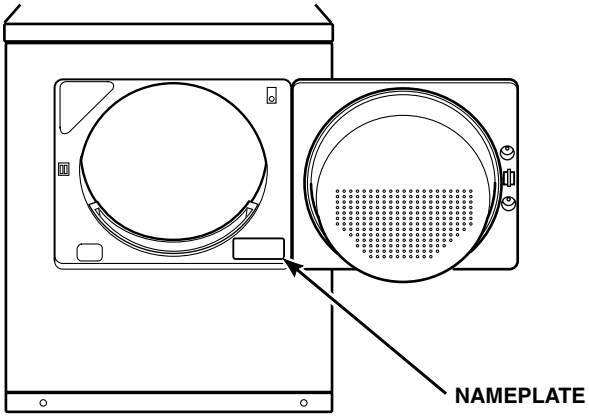

DRY912P_511462

© Copyright, Alliance Laundry Systems LLC – DO NOT COPY or TRANSMIT

Model Identification

Information in this manual is applicable to these dryer models:

ZE1010-1502	ZE1010-3005	ZE1110-1702	ZG1020-3004	ZG1120-3000
ZE1010-1702	ZE1010-3007	ZE1110-3000	ZG1020-3005	ZG1120-3002
ZE1010-3003	ZE1010-3008	ZE1110-3004	ZG1020-3008	ZG1120-3004
ZE1010-3004	ZE1110-1502	ZE1110-3005	ZG1120-1102	ZG1120-3005

© Copyright, Alliance Laundry Systems LLC – DO NOT COPY or TRANSMIT

Service Door and Meter Case

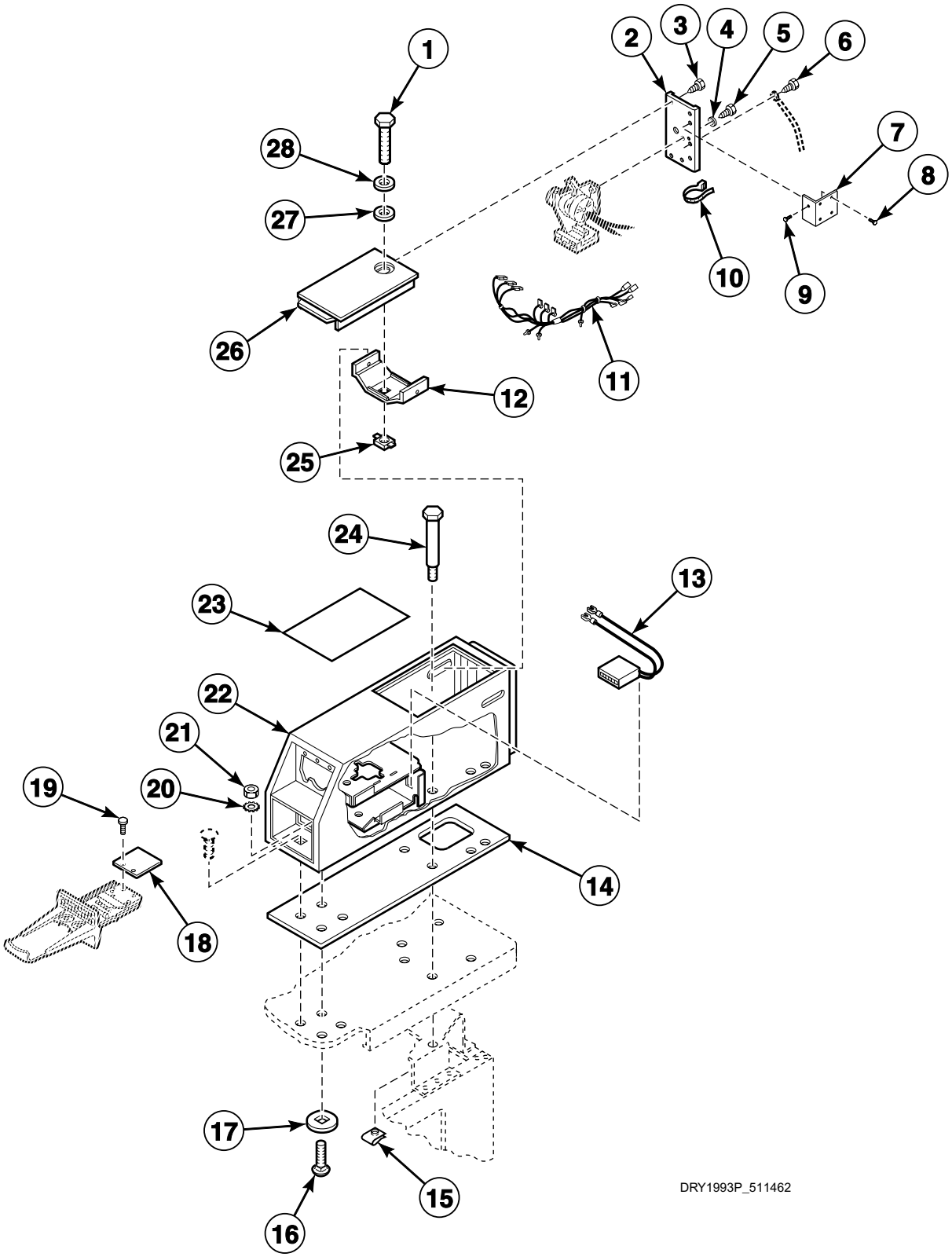

© Copyright, Alliance Laundry Systems LLC – DO NOT COPY or TRANSMIT

Service Door and Meter Case

REF	PART NO.	DESCRIPTION	COMMENTS
1	503673	Screw	
2	N/A	Timer Bracket	
3	503661	Screw	
4	21734	Washer	
5	03203	Screw	
6	20530	Screw	
7	N/A	Counter Bracket	
8	N/A	Screw	
9	51780	Screw	
10	55881	Harness Strap	
11	61310	Hood Wire Harness Assembly	Audit models through Serial No. S6348563YA
	510661P	Harness Replacement Kit	Audit models starting Serial No. S6348564YA
	510534P	Harness Replacement Kit	All other models
12	30642	Meter Case Locking Bracket	
13	62113P	Counter Kit	Audit models
14	26354	Meter Case Gasket	
15	80077	Nut	
16	02505	Bolt	
17	30627	Washer	
18	61031	Coin Slide Extension	
19	03950	Screw	
20	02431	Washer	
21	20275	Nut	
22	524P3W	Meter Case and Funnel Kit	
23	55969	Instruction Plate	
24	N/A	Screw	
25	30647	Nut	
26	35798W	Service Door Assembly	White
	35798L	Service Door Assembly	Almond
27	35774	Washer	
28	35917	Washer	

N/A = Part no longer available

© Copyright, Alliance Laundry Systems LLC – DO NOT COPY or TRANSMIT

Timer, Plate, Case and Knob

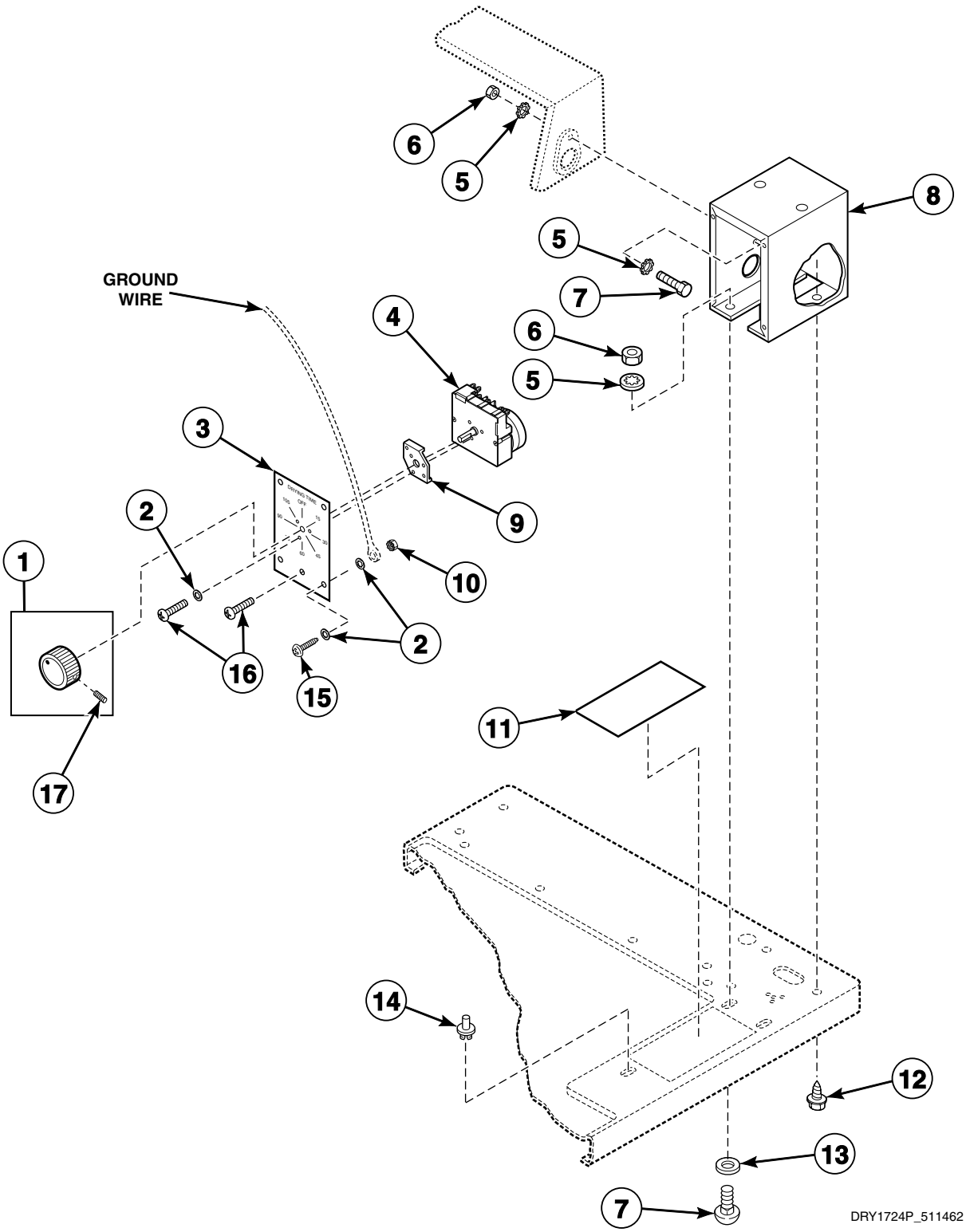

© Copyright, Alliance Laundry Systems LLC – DO NOT COPY or TRANSMIT

Timer, Plate, Case and Knob

REF	PART NO.	DESCRIPTION	COMMENTS
1	54678	Timer Knob	
2	21734	Washer	
3	N/A	Timer Plate Assembly	
4	N/A	Timer	60 Hertz; Models ZE1010-1502, ZE1010-1702, ZE1110-1502, ZE1110-1702 and ZG1120-1102
	58636	Timer	50 Hertz; All other models
5	02431	Washer	
6	20275	Nut	
7	02916	Screw	
8	37733W	Timer Case Assembly	
9	N/A	Timer Spacer	
10	51236	Nut	
11	500490	Instruction Plate	
12	501086	Screw	
13	20279	Washer	
14	26351	Rivet	
15	51778	Screw	
16	03203	Screw	
17	N/A	Screw	

N/A = Part no longer available

© Copyright, Alliance Laundry Systems LLC – DO NOT COPY or TRANSMIT

Accumulator - Metered Models Except Audit Models

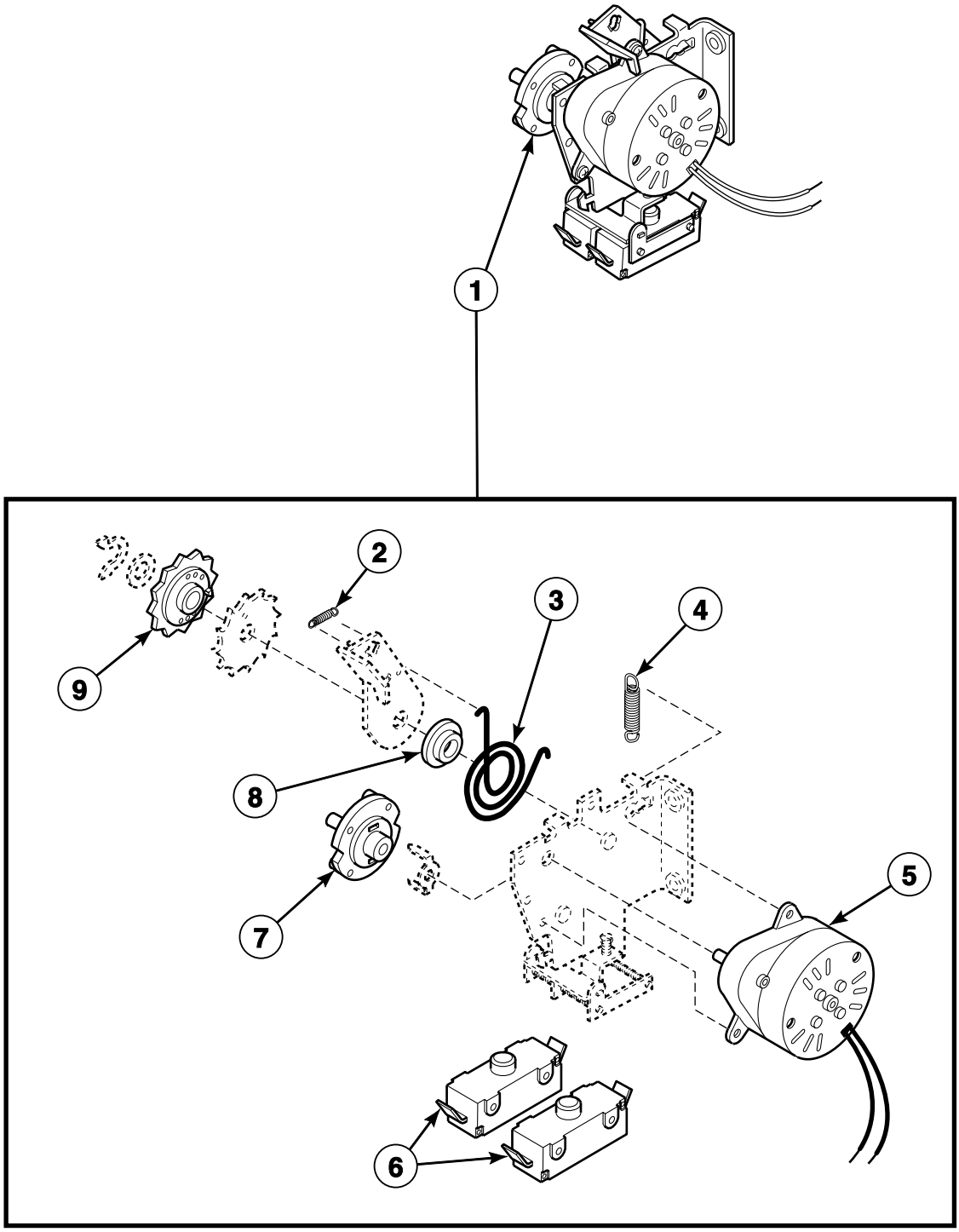

D003P_511462

© Copyright, Alliance Laundry Systems LLC – DO NOT COPY or TRANSMIT

Accumulator - Metered Models Except Audit Models

REF	PART NO.	DESCRIPTION	COMMENTS
1	510628P	Accumulator Replacement Kit	60 Hertz; Models ZE1010-1502, ZE1010-1702, ZE1110-1502, ZE1110-1702 and ZG1120-1102
	510629P	Accumulator Replacement Kit	50 Hertz; All other models
2	53244	Pawl Spring	
3	53261	Spring	
4	N/A	Index Spring	
5	512017P	Timer Motor	60 Hertz; Models ZE1010-1502, ZE1010-1702, ZE1110-1502, ZE1110-1702 and ZG1120-1102
	N/A	Timer Motor	50 Hertz; All other models
6	N/A	Switch	
7	53240	Timing Cam	60 minute; 3 pin
	53241	Timing Cam	45 minute; 4 pin
	53242	Timing Cam	30 minute; 6 pin
	53243	Timing Cam	20 minute; 9 pin
8	N/A	Bushing	
9	53239	Ratchet Wheel	

N/A = Part no longer available

© Copyright, Alliance Laundry Systems LLC – DO NOT COPY or TRANSMIT

Accumulator - Metered Audit Models

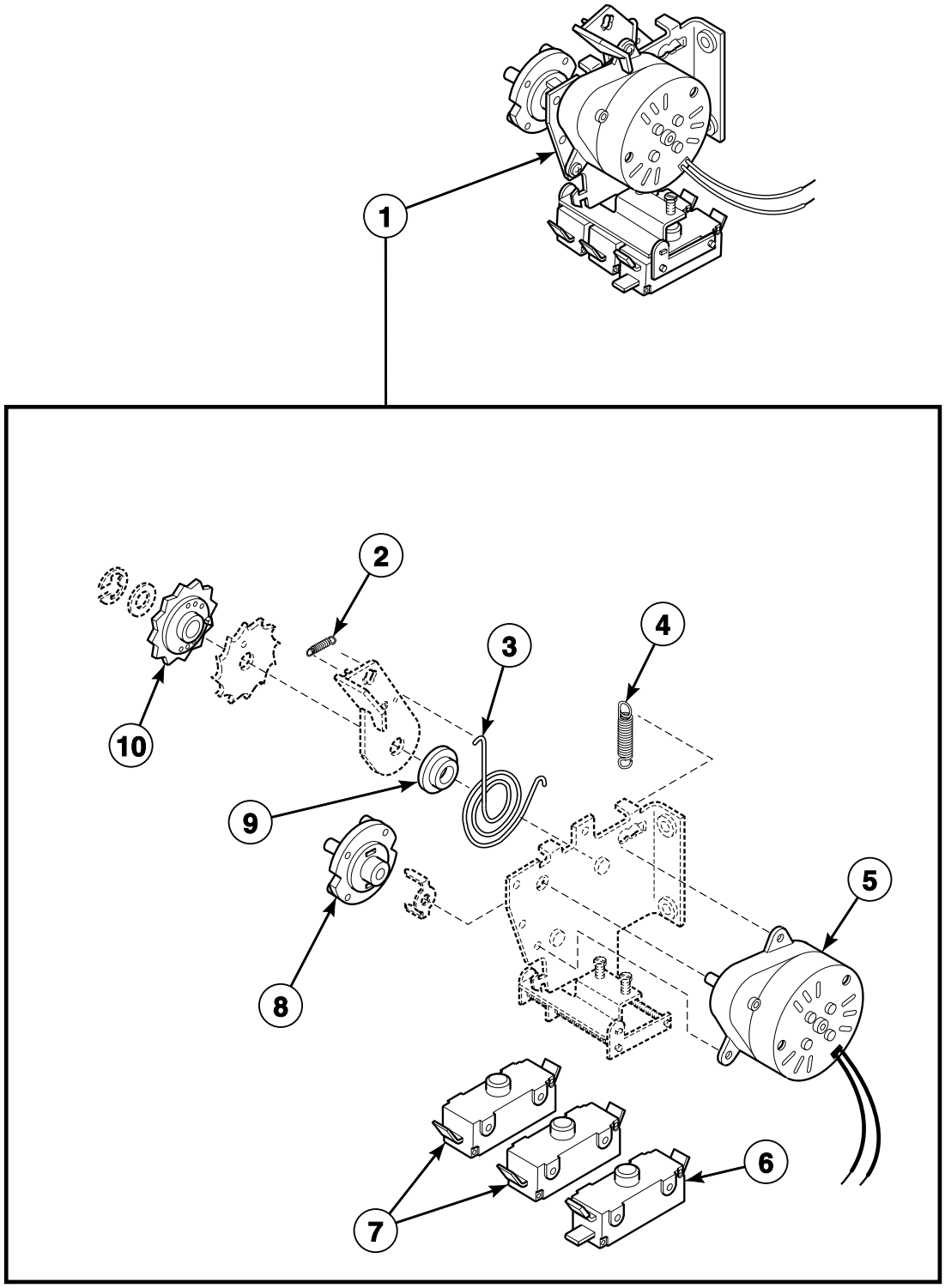

D004P_511462

© Copyright, Alliance Laundry Systems LLC – DO NOT COPY or TRANSMIT

Accumulator - Metered Audit Models

REF	PART NO.	DESCRIPTION	COMMENTS
1	510630P	Accumulator Replacement Kit	
2	53244	Pawl Spring	
3	53261	Spring	
4	N/A	Index Spring	
5	512017P	Timer Motor	
6	61468	Snap Switch	
7	N/A	Switch	
8	53240	Timing Cam	60 minute; 3 pin
	53241	Timing Cam	45 minute; 4 pin
	53242	Timing Cam	30 minute; 6 pin
	53243	Timing Cam	20 minute; 9 pin
9	N/A	Bushing	
10	53239	Ratchet Wheel	

N/A = Part no longer available

© Copyright, Alliance Laundry Systems LLC – DO NOT COPY or TRANSMIT

Control Panel, Control Hood and Controls - Nonmetered and Coin Slide Models

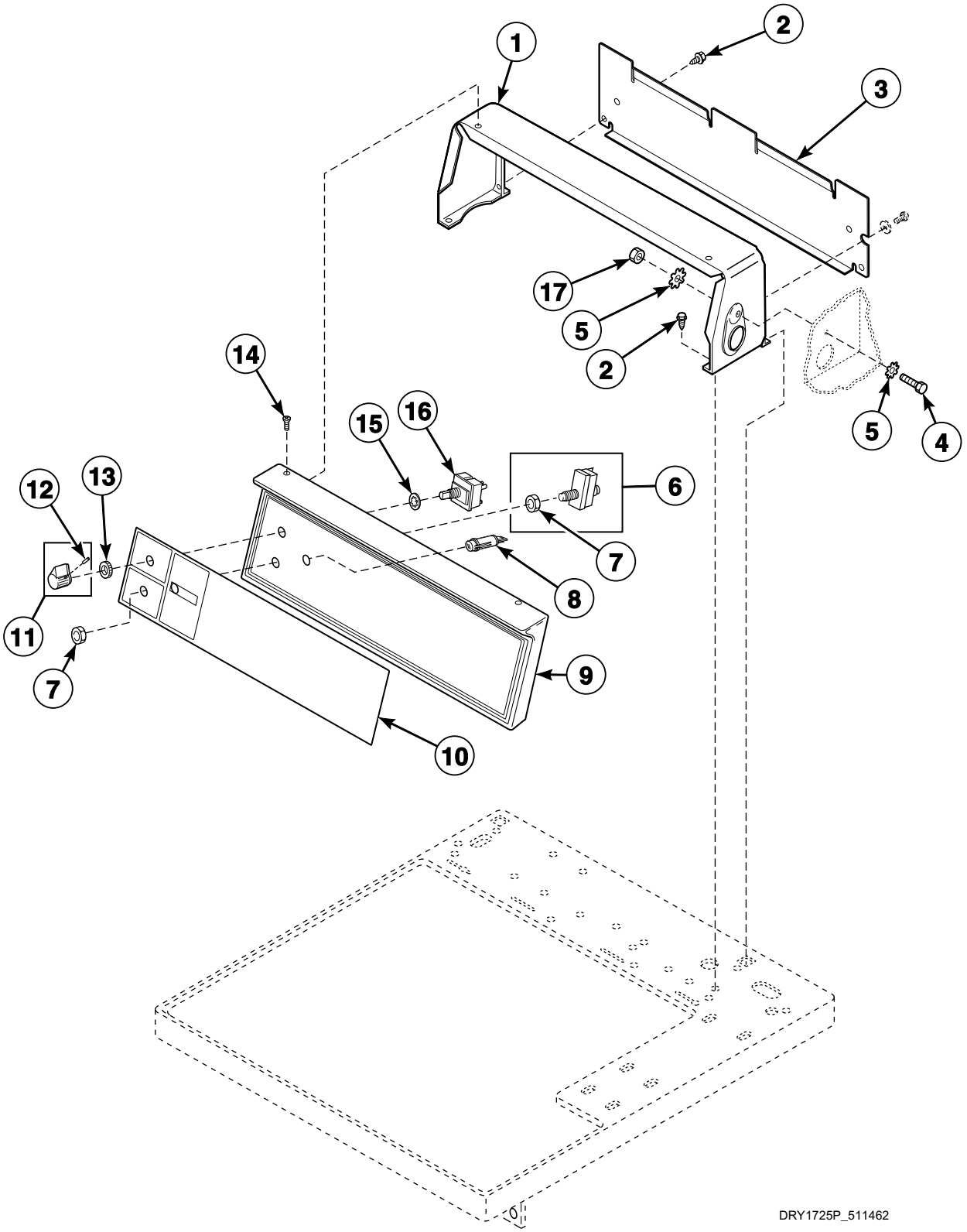

© Copyright, Alliance Laundry Systems LLC – DO NOT COPY or TRANSMIT

Control Panel, Control Hood and Controls - Nonmetered and Coin Slide Models

REF	PART NO.	DESCRIPTION	COMMENTS
1	502567W	Control Hood	White
	502567L	Control Hood	Almond
2	501086	Screw	
3	505798	Hood Back Plate	
4	02916	Screw	
5	02431	Washer	
6	55882	Switch Assembly	Includes item 7
7	52947	Nut	
8	32464	Light	60 Hertz; Models ZE1010-1502, ZE1010-1702, ZE1110-1502, ZE1110-1702 and ZG1120-1102
	32519	Light	50 Hertz; All other models
9	62645W	Control Panel and Bracket Assembly	White
	N/A	Control Panel and Bracket Assembly	Almond
10	N/A	Control Panel Overlay	
11	39897	Switch Knob	
12	N/A	Screw	
13	24205	Nut	
14	52864	Screw	
15	91176	Washer	
16	56576	Temperature Selector Switch	Models through Serial No. S6270865XG
	61512	Fabric Selector Switch	Models starting Serial No. S6270866XG
17	20275	Nut	

N/A = Part no longer available

© Copyright, Alliance Laundry Systems LLC – DO NOT COPY or TRANSMIT

Control Panel, Control Hood and Controls - Card Reader Models

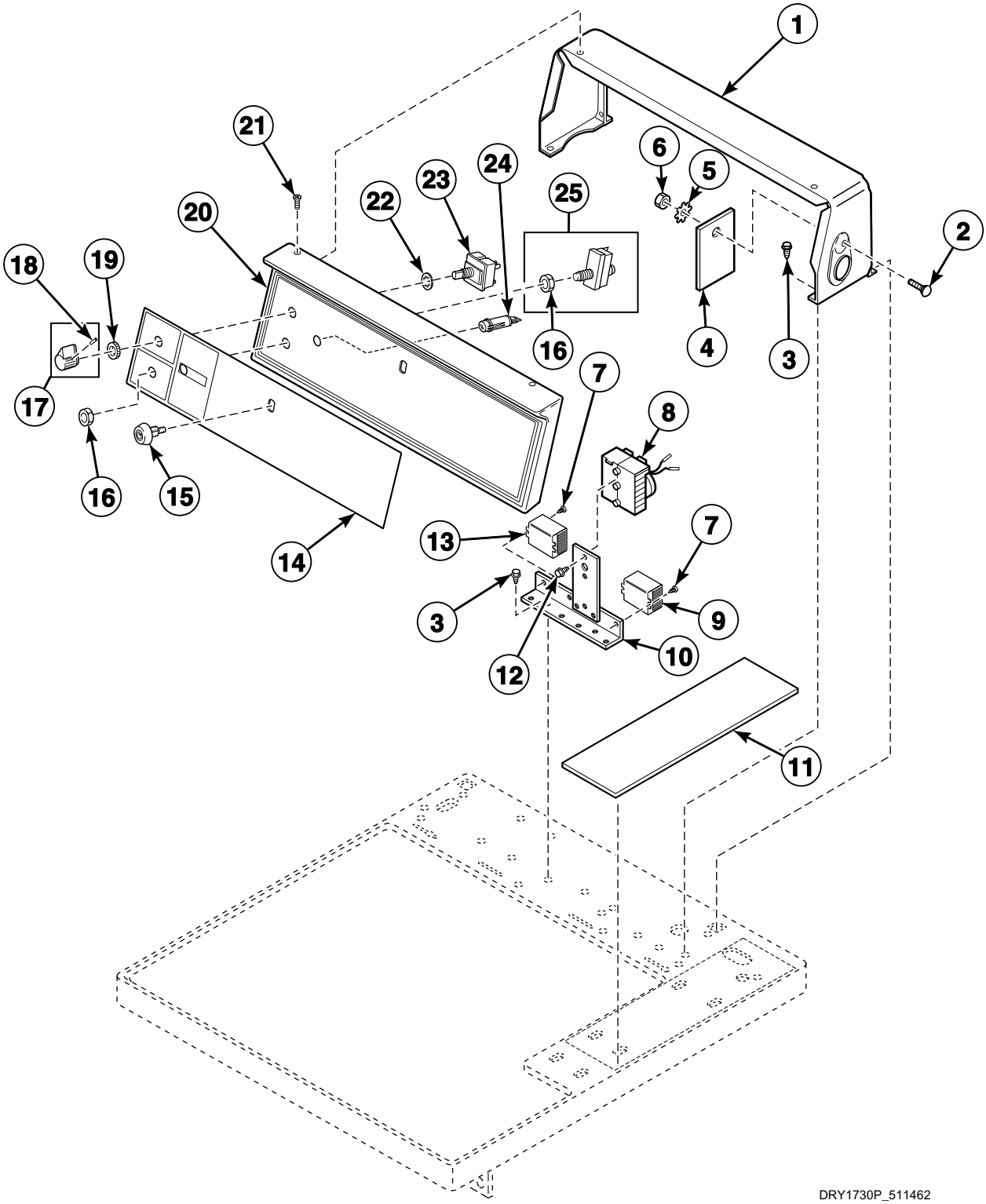

© Copyright, Alliance Laundry Systems LLC – DO NOT COPY or TRANSMIT

Control Panel, Control Hood and Controls - Card Reader Models

REF	PART NO.	DESCRIPTION	COMMENTS
1	N/A	Control Hood Assembly	
2	02505	Bolt	
3	501086	Screw	
4	N/A	Cover Plate	
5	02431	Washer	
6	20275	Nut	
7	23222	Screw	
8	N/A	Timer	
9	30616	Latch Relay	
10	N/A	Timer Bracket Assembly	
11	N/A	Instruction Plate	
12	80399	Screw	
13	31738	Relay	
14	N/A	Control Panel Overlay	
15	57916	Lock Plug	
16	52947	Nut	
17	39897	Switch Knob	
18	N/A	Screw	
19	24205	Nut	
20	62645W	Control Panel and Bracket Assembly	White
	N/A	Control Panel and Bracket Assembly	Almond
21	52864	Screw	
22	91176	Washer	
23	56576	Temperature Selector Switch	Models through Serial No. S6270865XG
	61512	Fabric Selector Switch	Models starting Serial No. S6270866XG
24	32464	Light	
25	55882	Switch Assembly	Includes item 16

N/A = Part no longer available

© Copyright, Alliance Laundry Systems LLC – DO NOT COPY or TRANSMIT

Cabinet Top

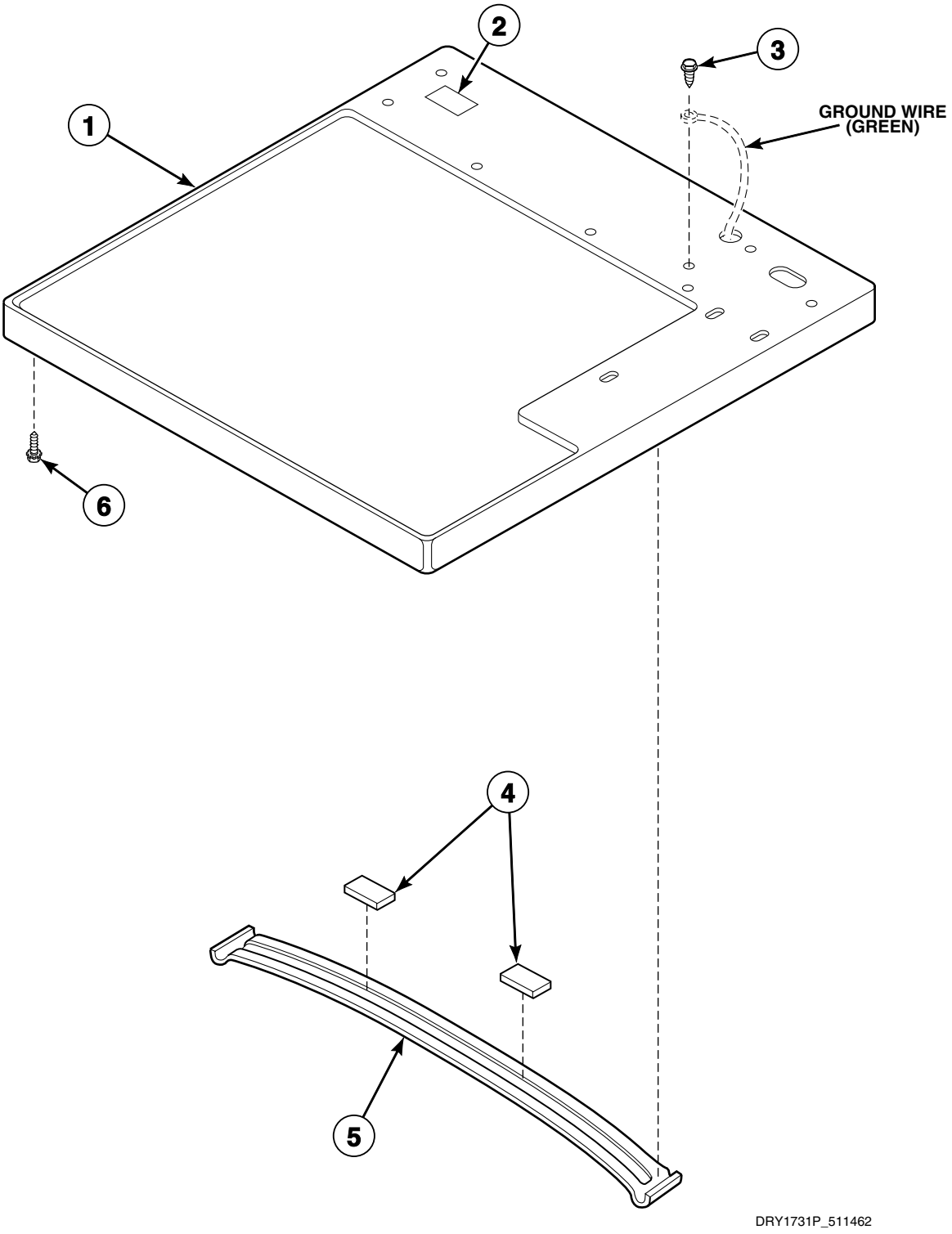

© Copyright, Alliance Laundry Systems LLC – DO NOT COPY or TRANSMIT

Cabinet Top

REF	PART NO.	DESCRIPTION	COMMENTS
1	505863WP	Top Kit	White
	N/A	Top Panel Assembly	Almond
2	505281	Disconnect Power Warning Label	
3	20530	Screw	
4	32670	Foam Pad	
5	56486	Top Brace	
6	503661	Screw	

N/A = Part no longer available

© Copyright, Alliance Laundry Systems LLC – DO NOT COPY or TRANSMIT

Loading Door, Front Panels and Access Door

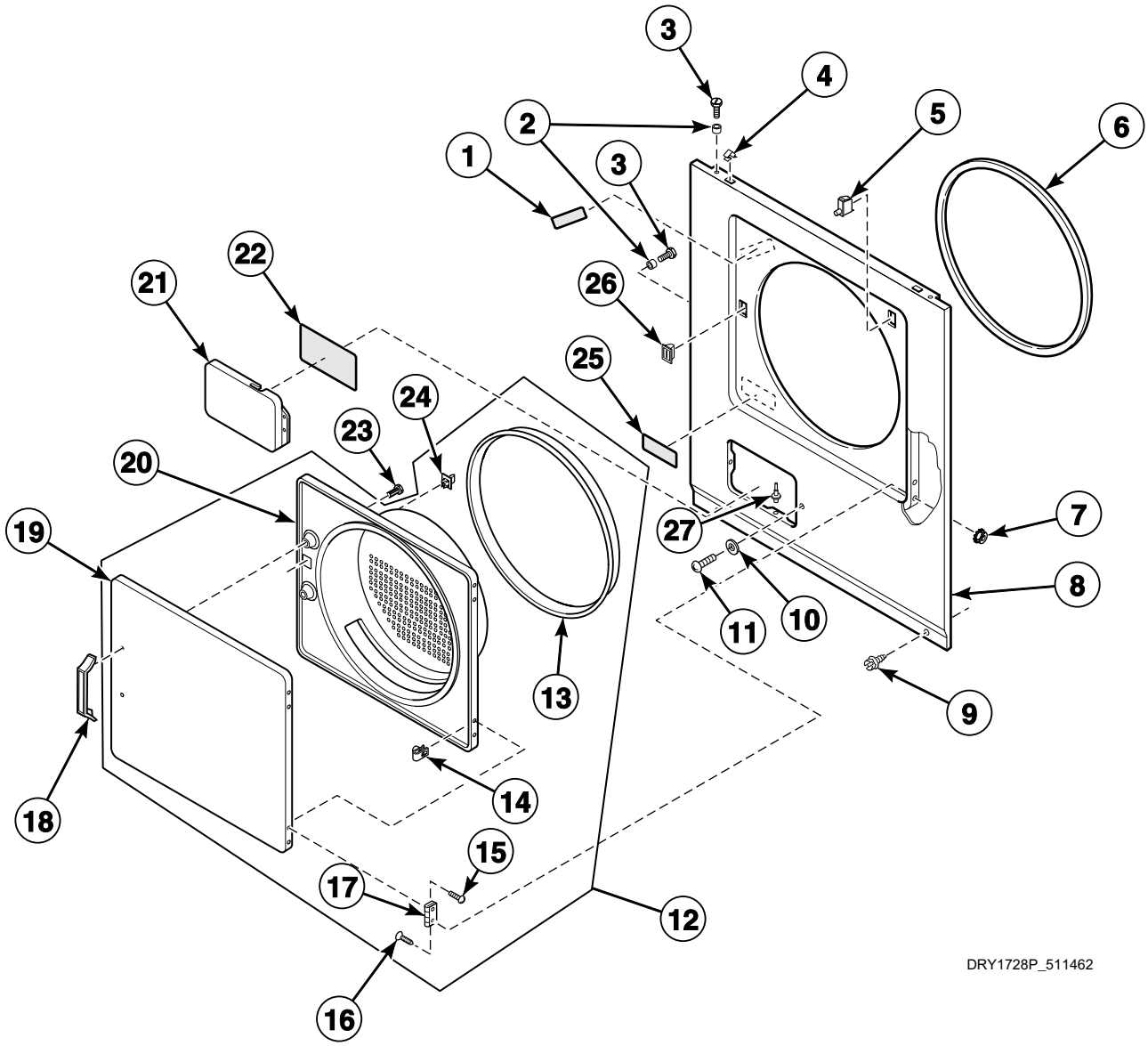

© Copyright, Alliance Laundry Systems LLC – DO NOT COPY or TRANSMIT

Loading Door, Front Panels and Access Door

REF	PART NO.	DESCRIPTION	COMMENTS
1	500281	Warning/Caution Label	
2	56079	Panel Locator	
3	39733	Screw	
4	28835	Speed Clip	
5	504570	Switch	
6	61380	Front Panel Seal	
7	51236	Nut	
8	62420WP	Front Panel Assembly	White; Electric models
	N/A	Front Panel	Gas models
9	503661	Screw	
10	21147	Washer	
11	57444	Screw	
12	62300WP	Door Assembly	White
	N/A	Door Assembly	Almond
13	61379	Door Seal	
14	23407	Nut	
15	52864	Screw	
16	22649	Screw	
17	56045	Hinge	
18	61925	Door Pull	
19	N/A	Door	
20	62152P	Door Liner	
21	60795W	Access Door	White; Gas models
	N/A	Access Door	Almond; Gas models
22	511004	Gas Clearance Label	
23	33561	Screw	
24	510181	Door Strike	
25	502804	Clean Lint Label	
26	510177	Door Catch Assembly	
27	56534	Support Barrel	

N/A = Part no longer available

© Copyright, Alliance Laundry Systems LLC – DO NOT COPY or TRANSMIT

Front Bulkhead, Air Duct, Felt Seal and Cylinder

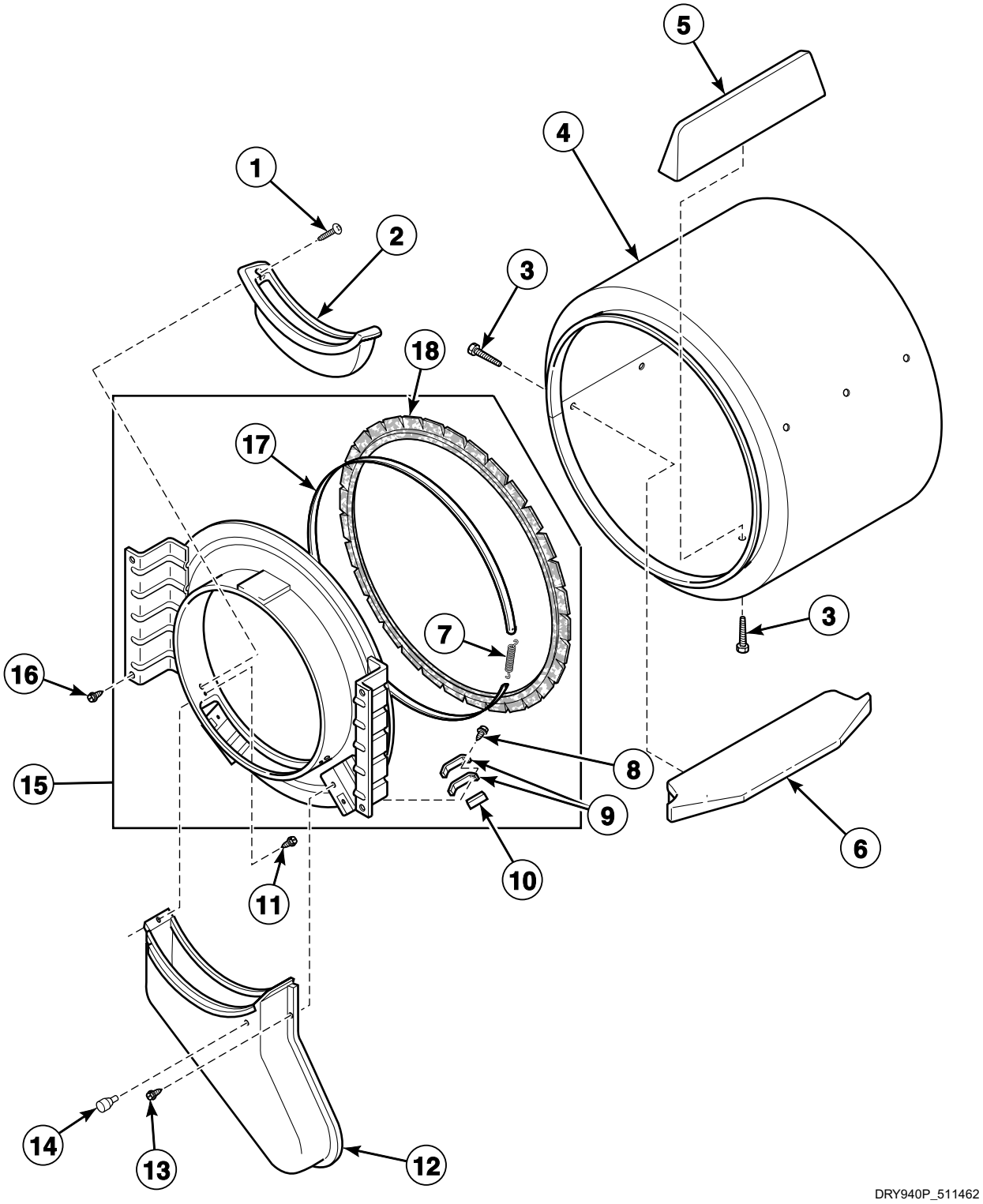

© Copyright, Alliance Laundry Systems LLC – DO NOT COPY or TRANSMIT

Front Bulkhead, Air Duct, Felt Seal and Cylinder

REF	PART NO.	DESCRIPTION	COMMENTS
1	25232	Screw	
2	61376P	Lint Filter	
3	62588	Screw	
4	60645P	Cylinder Assembly	Includes baffles
5	61399	Cylinder Baffle	Short; White; 2 required
6	61027	Cylinder Baffle	Extended; 1 required
7	52310	Spring	
8	23962	Screw	
9	61448	Cylinder Glide	
10	58049	Thin Pad	
11	33561	Screw	
12	60786	Air Duct Assembly	
13	23962	Screw	
14	N/A	Bumper	
15	N/A	Front Bulkhead Assembly	
16	503661	Screw	
17	56090	Seal Strap	
18	56088	Seal Assembly	

N/A = Part no longer available

© Copyright, Alliance Laundry Systems LLC – DO NOT COPY or TRANSMIT

Rear Bulkhead, Felt Seal and Cylinder Roller

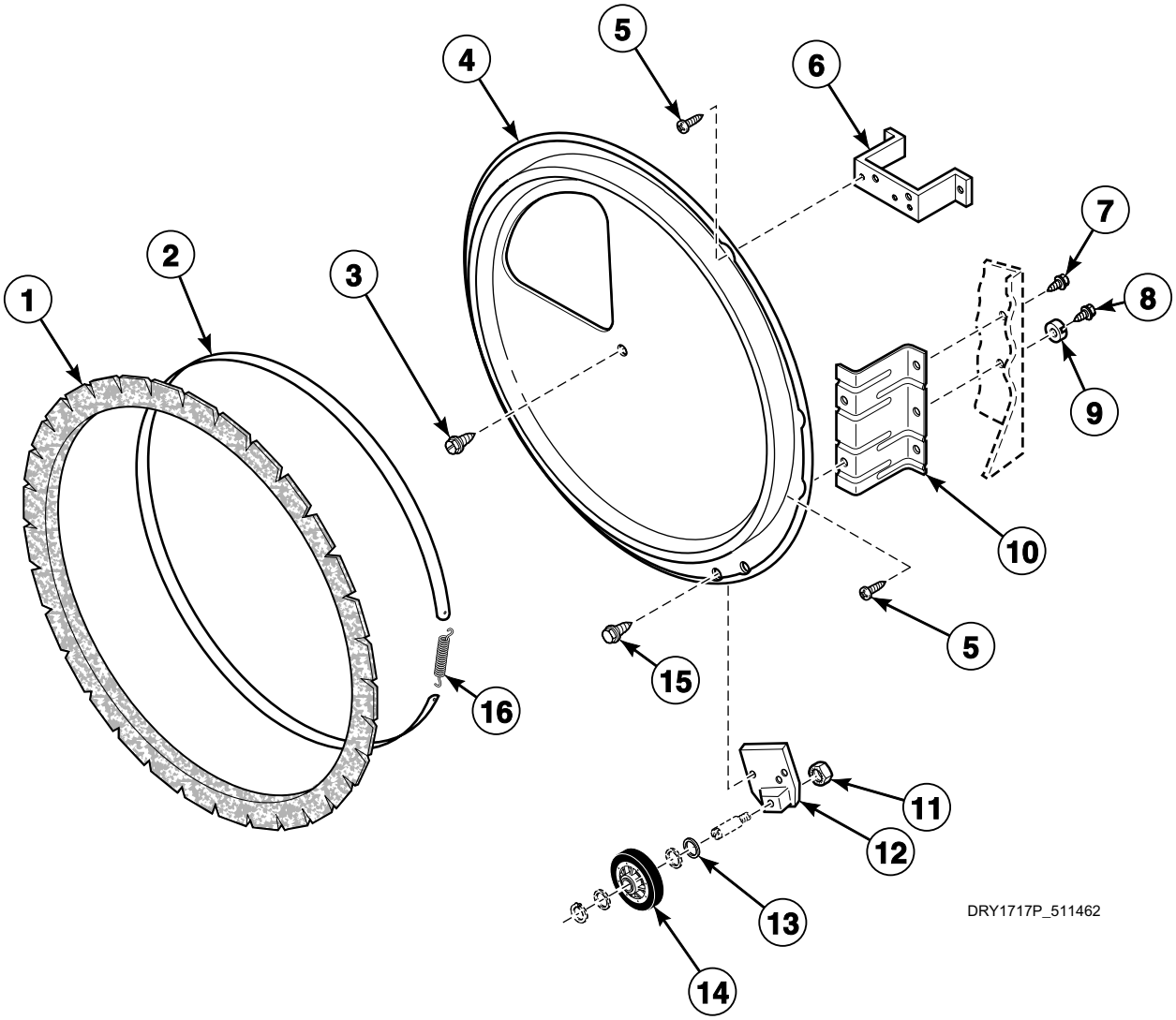

© Copyright, Alliance Laundry Systems LLC – DO NOT COPY or TRANSMIT

Rear Bulkhead, Felt Seal and Cylinder Roller

REF	PART NO.	DESCRIPTION	COMMENTS
1	56088	Seal Assembly	
2	56090	Seal Strap	
3	33561	Screw	
4	61135P	Rear Bulkhead Assembly	
5	M400664	Screw	
6	N/A	Terminal Block Bracket	
7	503661	Screw	
8	52909	Screw	Green
9	51474	Washer	
10	N/A	Rear Bulkhead Bracket	
11	56156	Nut	
12	N/A	Cylinder Roller Bracket	Models starting Serial No. S6270866XG
13	20279	Washer	
14	56285	Cylinder Roller	
15	51780	Screw	
16	52310	Spring	

N/A = Part no longer available

© Copyright, Alliance Laundry Systems LLC – DO NOT COPY or TRANSMIT

Motor, Exhaust Fan and Belt

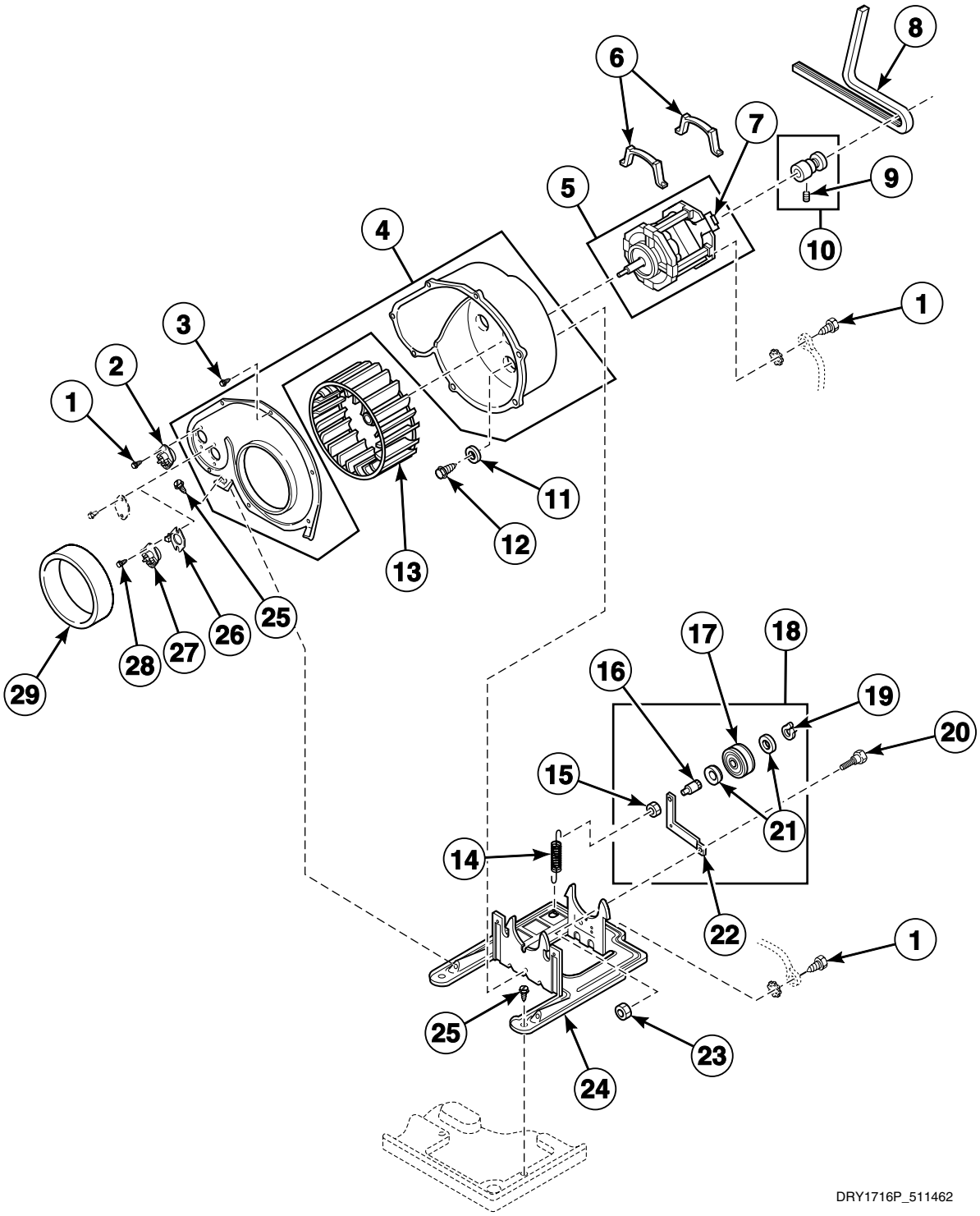

© Copyright, Alliance Laundry Systems LLC – DO NOT COPY or TRANSMIT

Motor, Exhaust Fan and Belt

REF	PART NO.	DESCRIPTION	COMMENTS
	27604P	Anti-Seize Compound	Apply to motor shaft before installing the blower fan assembly
1	23222	Screw	
2	57015	Thermostat	Models through Serial No. S6270865XG
3	23962	Screw	
4	511969P	Blower Housing and Cover Kit	
5	58044	Motor	Includes switch; 60 Hertz; Models ZE1010-1502, ZE1010-1702, ZE1110-1502, ZE1110-1702 and ZG1120-1102
	58056	Motor	Includes switch; 50 Hertz; All other models
6	510180	Motor Mount Clamp	
7	N/A	Motor Switch	
8	511255	Cylinder Belt	
9	62541	Screw	
10	N/A	Motor Pulley Assembly	60 Hertz; Models ZE1010-1502, ZE1010-1702, ZE1110-1502, ZE1110-1702 and ZG1120-1102
	59884	Motor Pulley Assembly	50 Hertz; All other models
11	20492	Washer	
12	503661	Screw	
13	510139P	Blower Fan Assembly	
14	510185	Idler Spring	
15	56156	Nut	
16	56461	Shaft	
17	510142P	Idler Wheel and Bearing Assembly	
18	511227	Motor Mount and Idler Assembly	
19	23748	Retaining Ring	
20	N/A	Screw	
21	52549	Washer	
22	N/A	Idler Lever	
23	52566	Nut	
24	510060	Motor Mount	
25	51780	Screw	Optional
26	61623	Thermostat Heater	Use with 503552 or 61556 Thermostat; 60 Hertz; Models ZE1010-1502, ZE1010-1702, ZE1110-1502, ZE1110-1702 and ZG1120-1102
	61622	Thermostat Heater	Use with 503552 or 61556 Thermostat; 50 Hertz; All other models
27	56470	Thermostat	Models through Serial No. S6270865XG
	503552	Thermostat	Green; 60 Hertz; Models ZE1010-1502, ZE1010-1702, ZE1110-1502, ZE1110-1702 and ZG1120-1102 starting Serial No. S6270866XG
	61556	Thermostat	50 Hertz; All other models starting Serial No. S6270866XG
28	23222	Screw	Use with 56470 Thermostat
	33561	Screw	Use with 503552 or 61556 Thermostat
29	56065	Seal	

N/A = Part no longer available

© Copyright, Alliance Laundry Systems LLC – DO NOT COPY or TRANSMIT

Cabinet, Exhaust Duct and Base

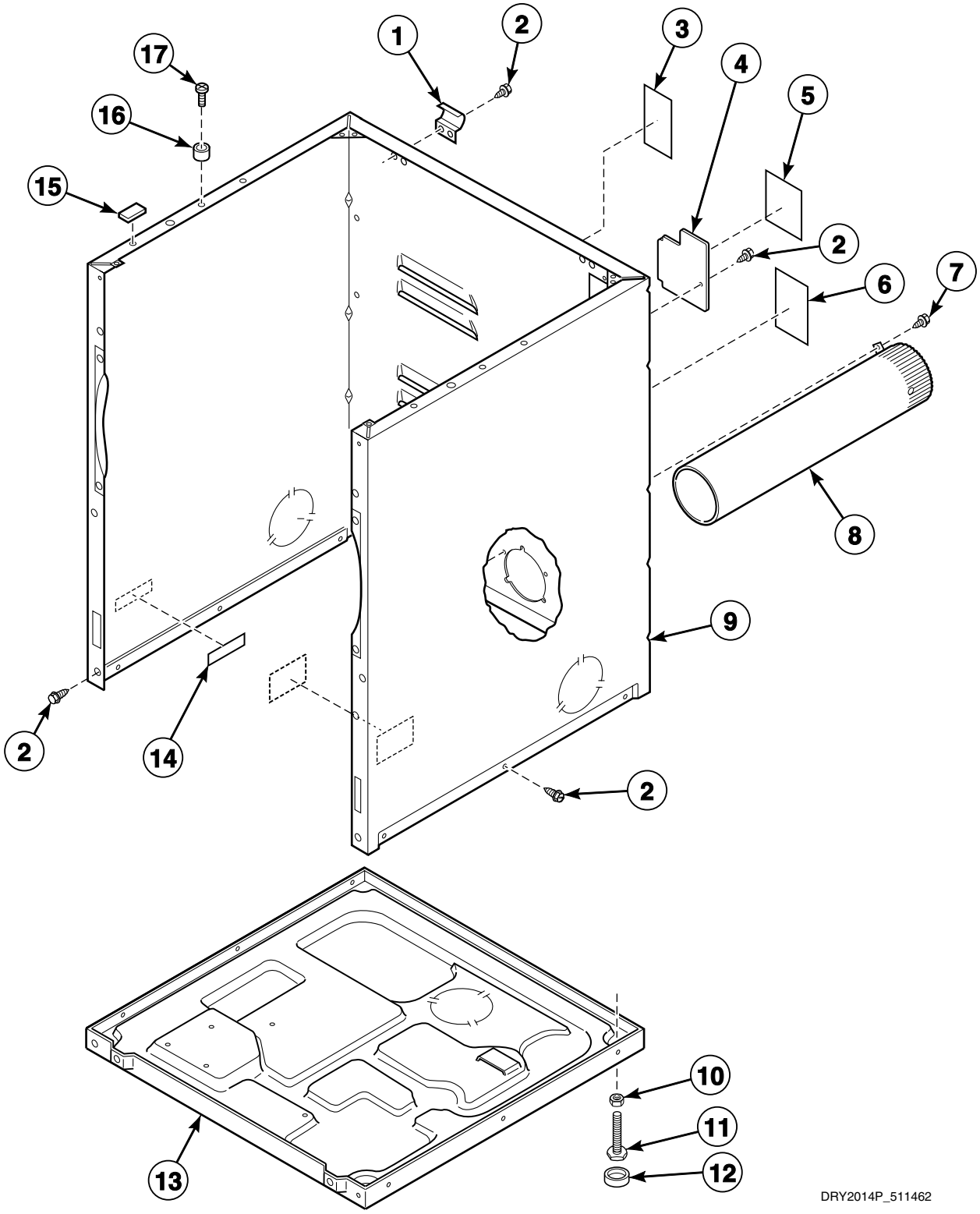

© Copyright, Alliance Laundry Systems LLC – DO NOT COPY or TRANSMIT

Cabinet, Exhaust Duct and Base

REF	PART NO.	DESCRIPTION	COMMENTS
	505281	Disconnect Power Warning Label	
1	N/A	Top Hinge	
2	503661	Screw	
3	511004	Gas Clearance Label	Gas models
4	60821	Access Cover Plate	
5	N/A	Install Notice Sticker	Electric models
6	511005	Electric Clearance Label	Electric models
7	23962	Screw	
8	N/A	Exhaust Duct Assembly	
9	N/A	Dryer Cabinet Assembly	
10	20274	Nut	
11	52696	Screw	
12	70282	Rubber Foot	
13	N/A	Base Assembly	
14	61294	Fuse Notice Label	Electric models
15	56128	Bumper Pad	
16	56079	Panel Locator	
17	39733	Screw	

N/A = Part no longer available

© Copyright, Alliance Laundry Systems LLC – DO NOT COPY or TRANSMIT

Terminal Block - Electric Models without Power Cord Through Serial No. S6270865XG

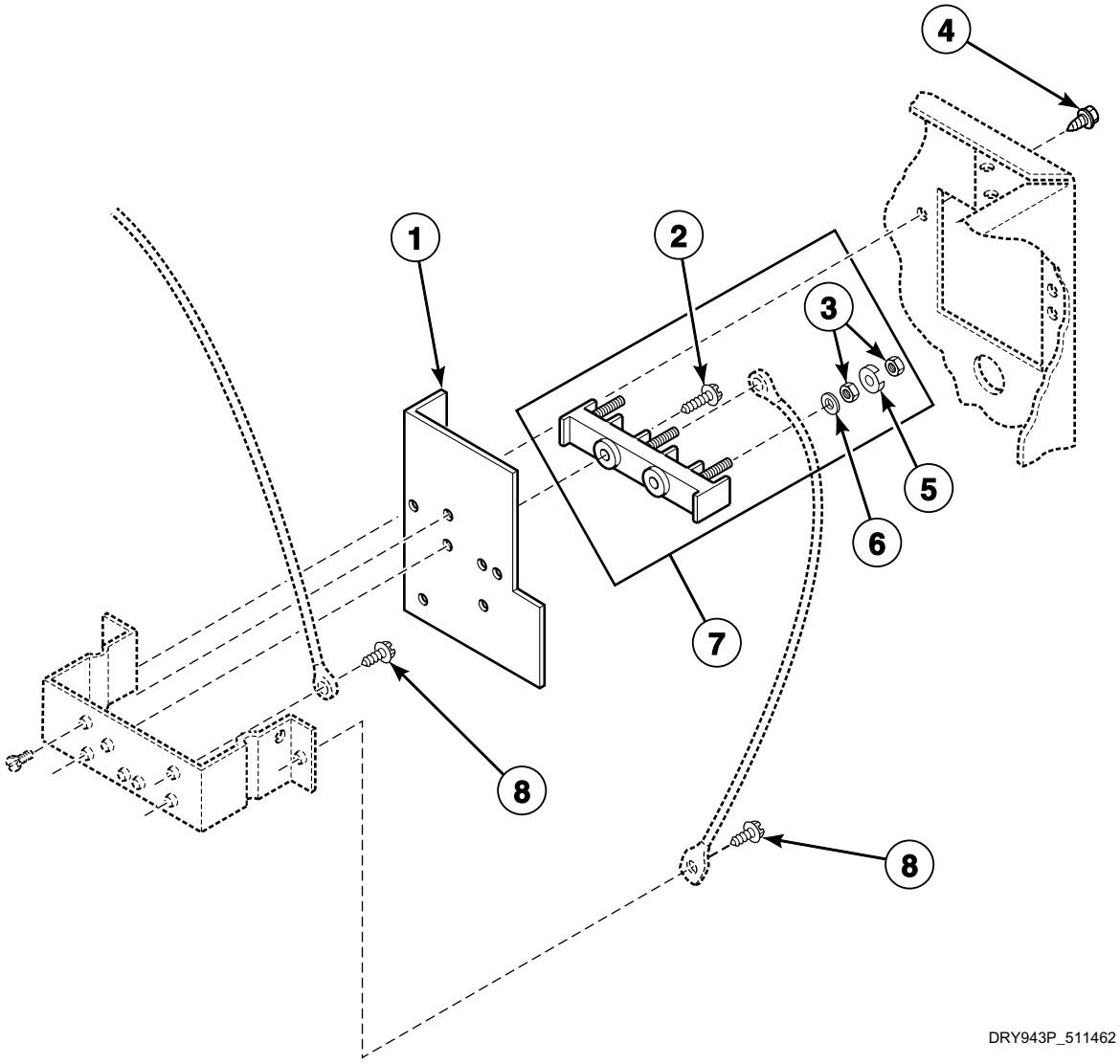

© Copyright, Alliance Laundry Systems LLC – DO NOT COPY or TRANSMIT

Terminal Block - Electric Models without Power Cord Through Serial No. S6270865XG

REF	PART NO.	DESCRIPTION	COMMENTS
1	56087	Terminal Block Shield	
2	Q6535	Screw	
3	Q6163	Nut	
4	503661	Screw	
5	51474	Washer	
6	56552	Washer	
7	50854A	Terminal Block Assembly	
8	20530	Screw	

© Copyright, Alliance Laundry Systems LLC – DO NOT COPY or TRANSMIT

Terminal Block - Electric Models with Power Cord Through Serial No. S6270865XG

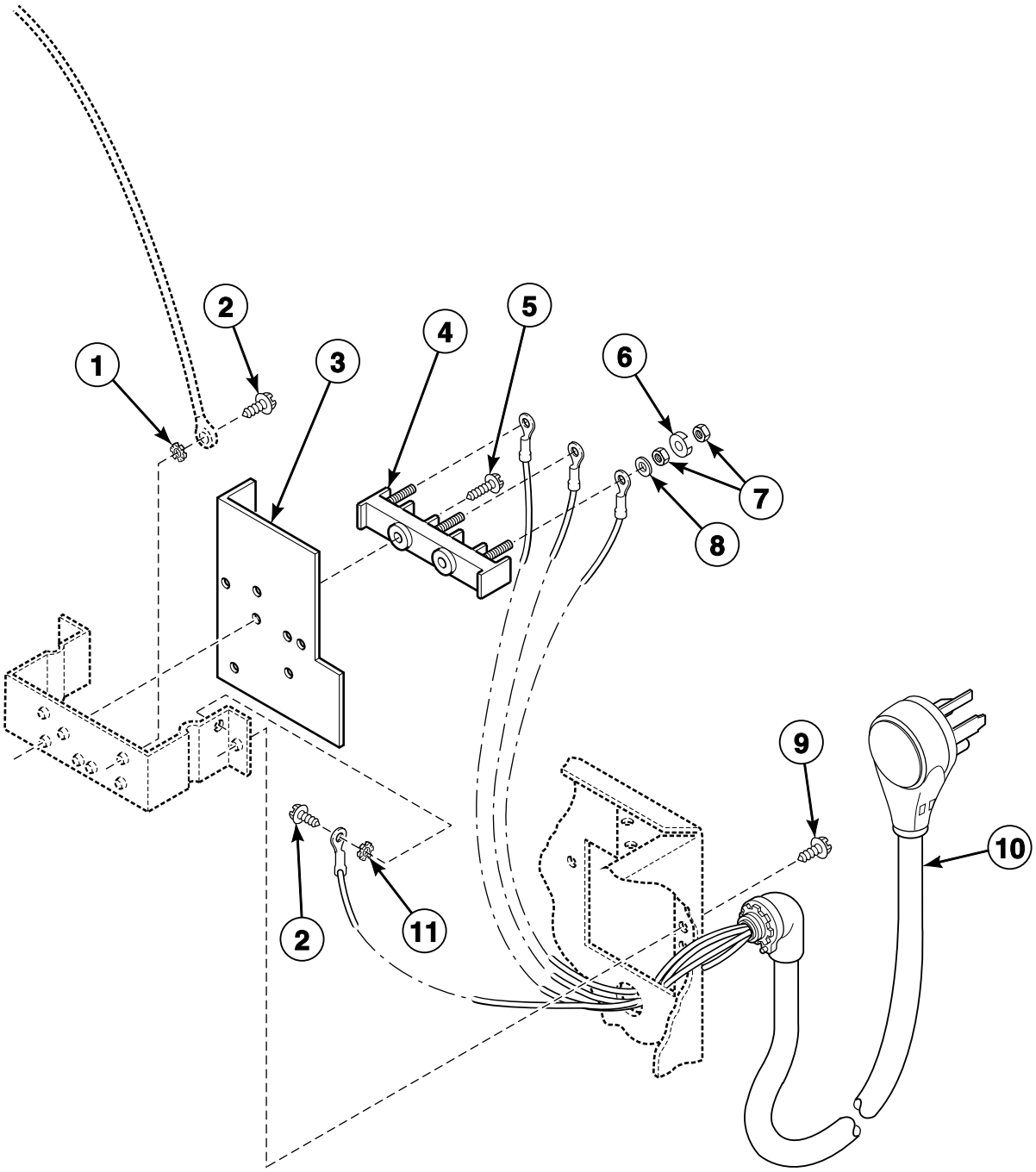

© Copyright, Alliance Laundry Systems LLC – DO NOT COPY or TRANSMIT

Terminal Block - Electric Models with Power Cord Through Serial No. S6270865XG

REF	PART NO.	DESCRIPTION	COMMENTS
1	03815	Washer	
2	20530	Screw	
3	56087	Terminal Block Shield	
4	50854A	Terminal Block Assembly	
5	62588	Screw	
6	51474	Washer	
7	Q6163	Nut	
8	56552	Washer	
9	503661	Screw	
10	510505P	Lead-In Cord Assembly	4-wire
11	03815	Washer	

© Copyright, Alliance Laundry Systems LLC – DO NOT COPY or TRANSMIT

Terminal Block - Electric Models without Power Cord
Starting Serial No. S6270866XG

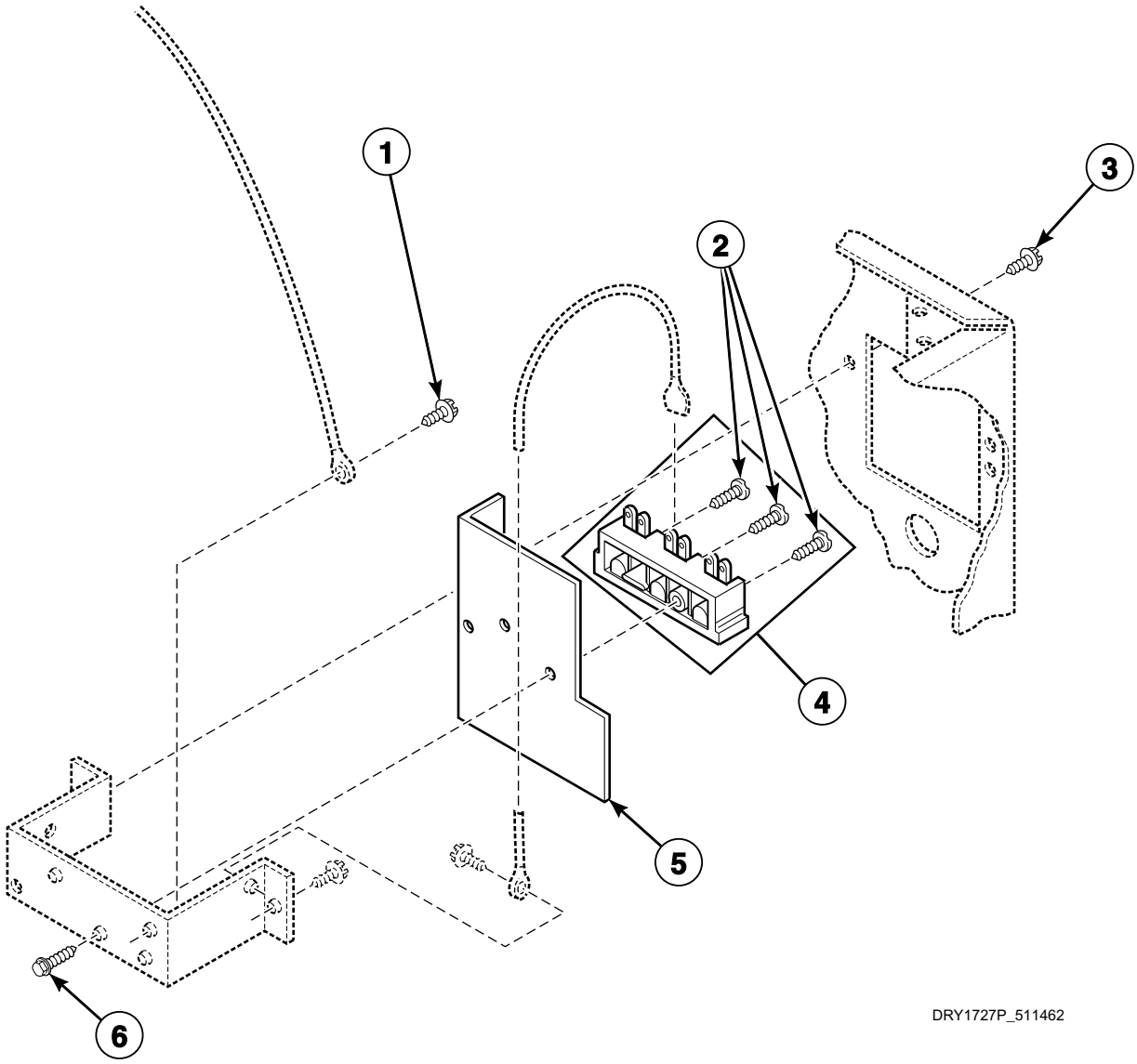

© Copyright, Alliance Laundry Systems LLC – DO NOT COPY or TRANSMIT

Terminal Block - Electric Models without Power Cord
Starting Serial No. S6270866XG

REF	PART NO.	DESCRIPTION	COMMENTS
1	20530	Screw	
2	61199	Screw	
3	503661	Screw	
4	510190P	Terminal Block Assembly	Includes 3 of item 2
5	56087	Terminal Block Shield	
6	501285	Screw	

© Copyright, Alliance Laundry Systems LLC – DO NOT COPY or TRANSMIT

Terminal Block - Electric Models with Power Cord
Starting Serial No. S6270866XG

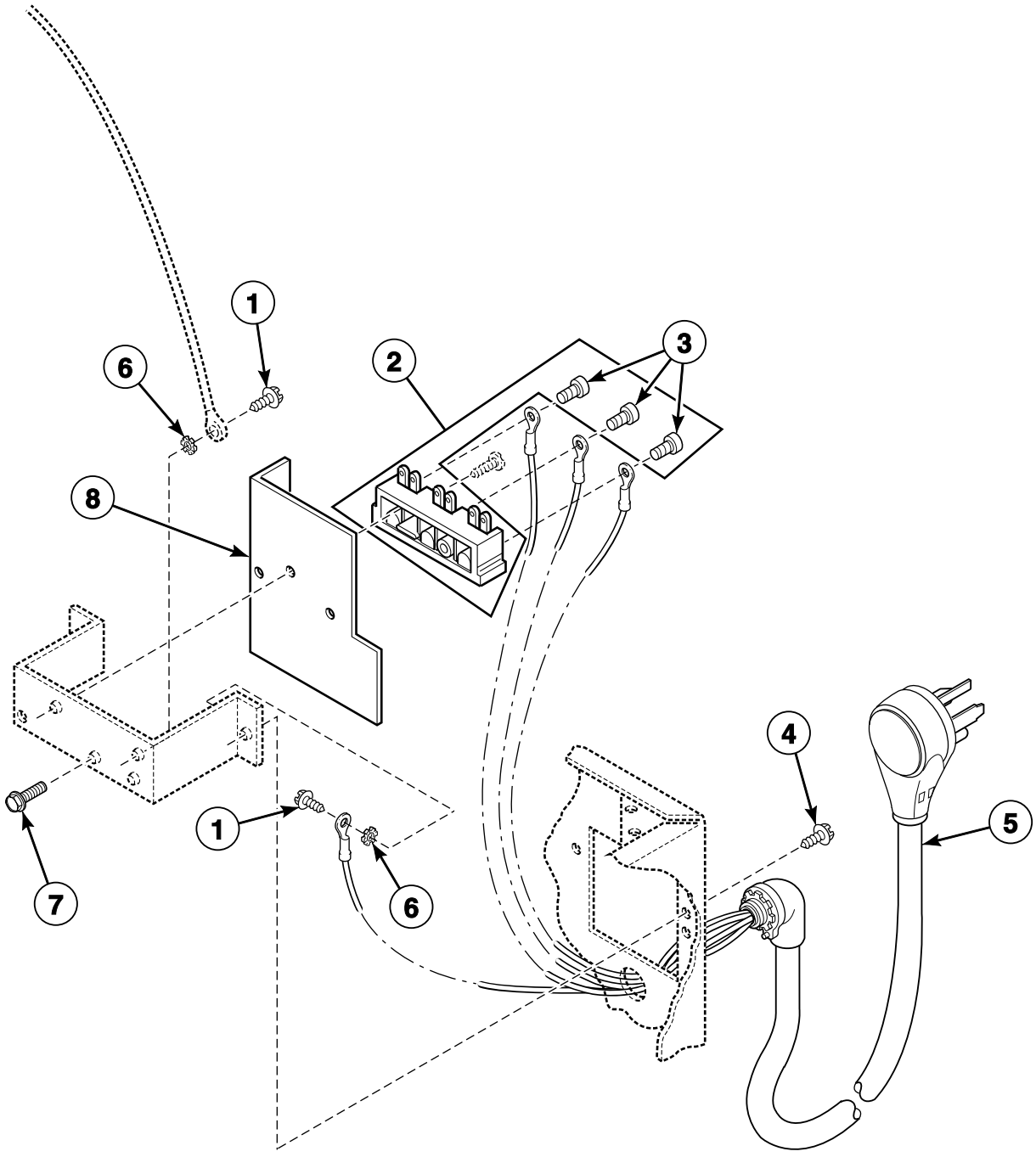

© Copyright, Alliance Laundry Systems LLC – DO NOT COPY or TRANSMIT

Terminal Block - Electric Models with Power Cord
Starting Serial No. S6270866XG

REF	PART NO.	DESCRIPTION	COMMENTS
1	20530	Screw	
2	510190P	Terminal Block Assembly	Includes 3 of item 3
3	61199	Screw	
4	503661	Screw	
5	510505P	Lead-In Cord Assembly	4-wire
6	03815	Washer	
7	501285	Screw	
8	56087	Terminal Block Shield	

© Copyright, Alliance Laundry Systems LLC – DO NOT COPY or TRANSMIT

Heater Duct - Electric Models Through Serial No. S6270865XG

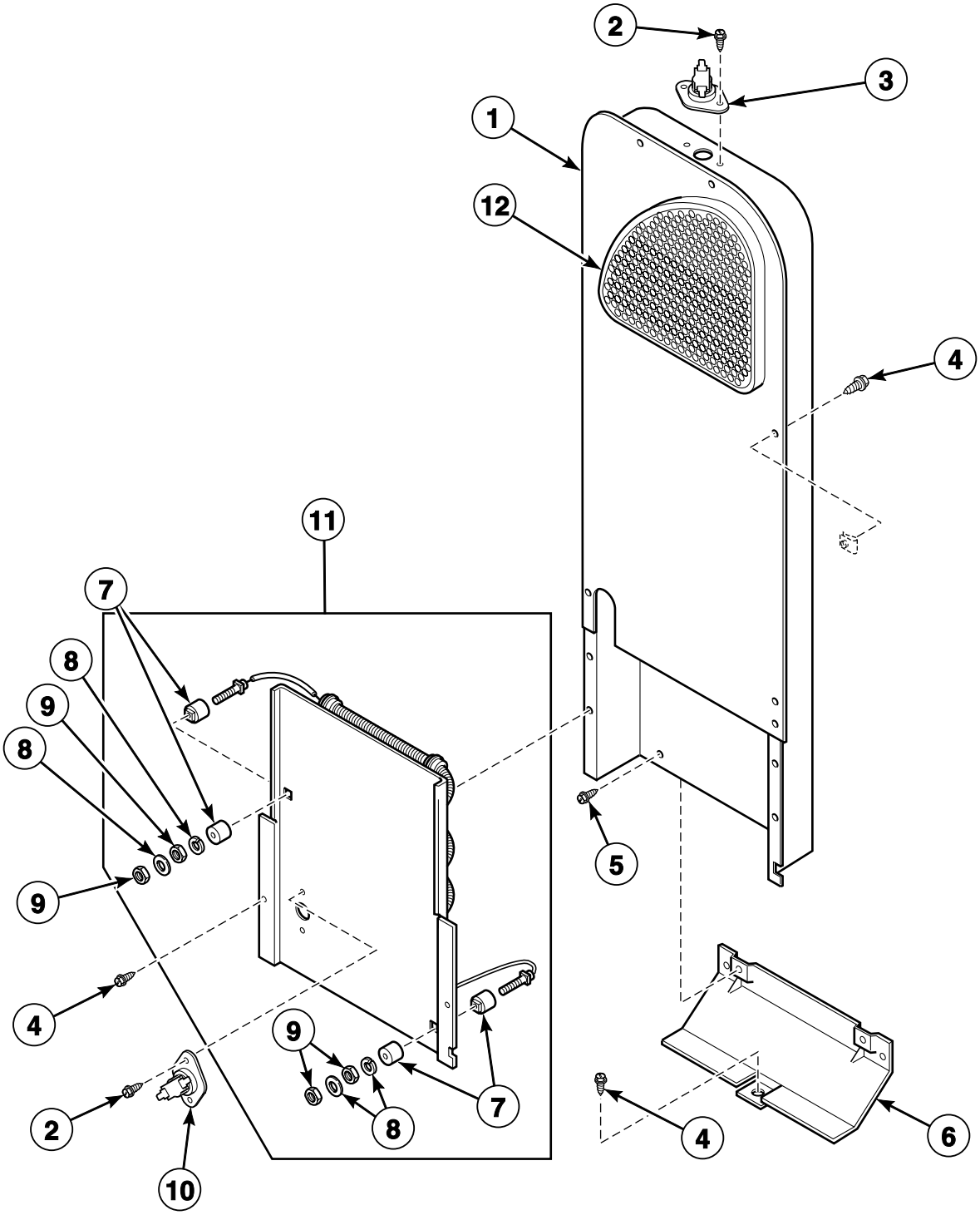

DRY1704P_511462

© Copyright, Alliance Laundry Systems LLC – DO NOT COPY or TRANSMIT

Heater Duct - Electric Models Through Serial No. S6270865XG

REF	PART NO.	DESCRIPTION	COMMENTS
1	500180P	Heater Duct Assembly	Models equipped with 57239 Thermostat
	510025P	Heater Duct and Screw Assembly	Includes item 12; All other models
2	23222	Screw	
3	57239	Thermostat	
4	503661	Screw	
5	51780	Screw	
6	60952	Heat Duct Shield	
7	N/A	Terminal Bushings Assembly	
8	56552	Washer	
9	Q6163	Nut	
10	56082	Limit Thermostat	
11	61928	Heater Kit Assembly	208 Volt/60 Hertz; 4.75 kW
	61927	Heater Kit Assembly	230 or 240 Volt/60 Hertz; 5.0 kW
	61929	Heater Kit Assembly	230 or 240 Volt/50 Hertz; 5.0 kW
12	500820	Outlet Cover	

N/A = Part no longer available

© Copyright, Alliance Laundry Systems LLC – DO NOT COPY or TRANSMIT

Heater Duct - Electric Models Starting Serial No. S6270866XG

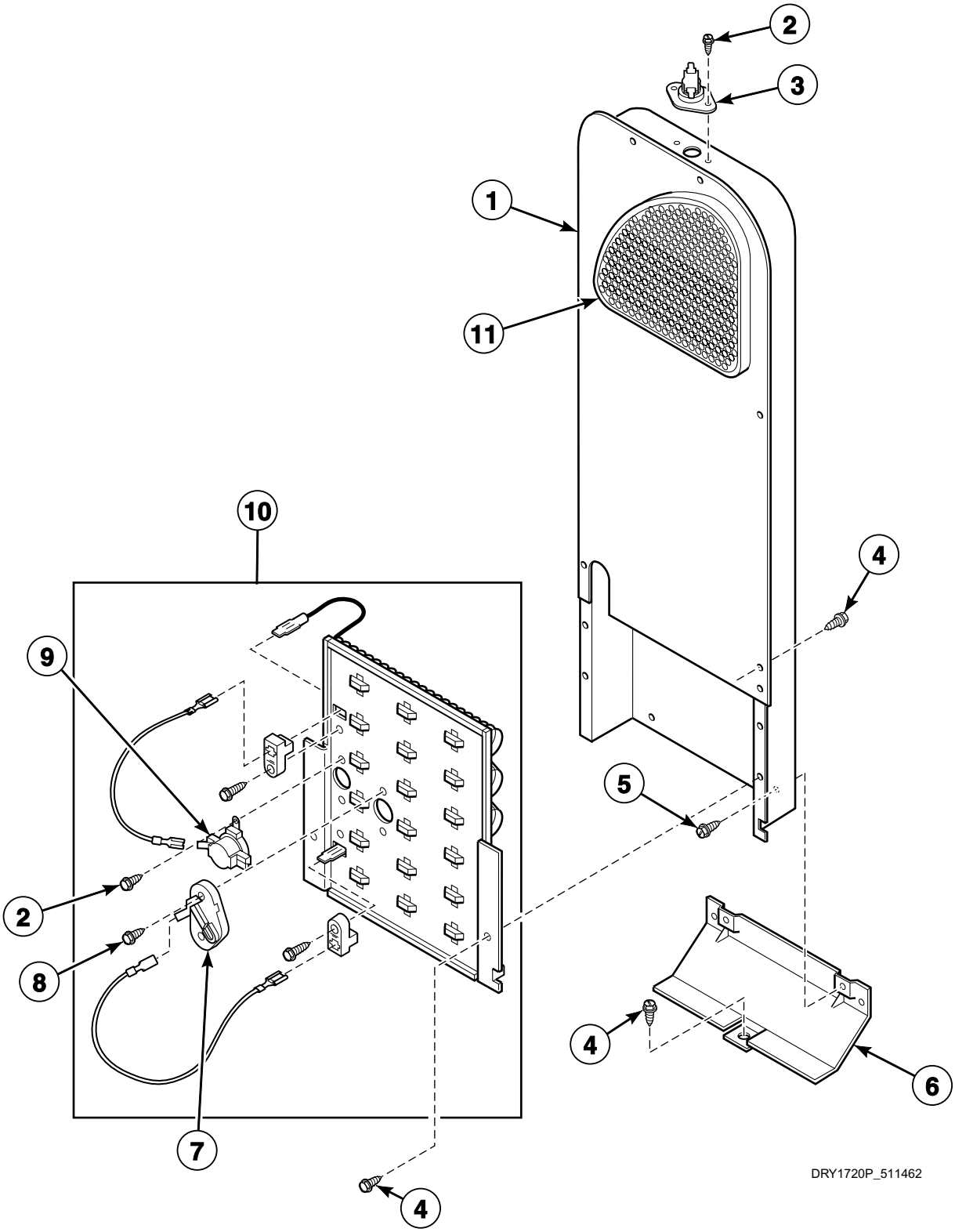

© Copyright, Alliance Laundry Systems LLC – DO NOT COPY or TRANSMIT

Heater Duct - Electric Models Starting Serial No. S6270866XG

REF	PART NO.	DESCRIPTION	COMMENTS
1	500180P	Heater Duct Assembly	Models equipped with 57239 Thermostat
	510025P	Heater Duct and Screw Assembly	Includes item 11; All other models
2	23222	Screw	
3	57239	Thermostat	
4	503661	Screw	
5	51780	Screw	
6	60952	Heat Duct Shield	
7	490P3	Thermal Fuse Kit	
8	56693	Screw	
9	510701	Limit Thermostat	
10	61928	Heater Kit Assembly	208 Volt/60 Hertz; 4.75 kW
	61927	Heater Kit Assembly	240 Volt/60 Hertz; 5.0 kW
	61931	Heater Kit Assembly	240 Volt/50 or 60 Hertz; 3.1 kW
	61929	Heater Kit Assembly	240 Volt/50 Hertz; 5.0 kW
	61930	Heater Kit Assembly	240 Volt/50 Hertz; 4.0 kW
11	500820	Outlet Cover	

© Copyright, Alliance Laundry Systems LLC – DO NOT COPY or TRANSMIT

Heater Duct - Gas Models

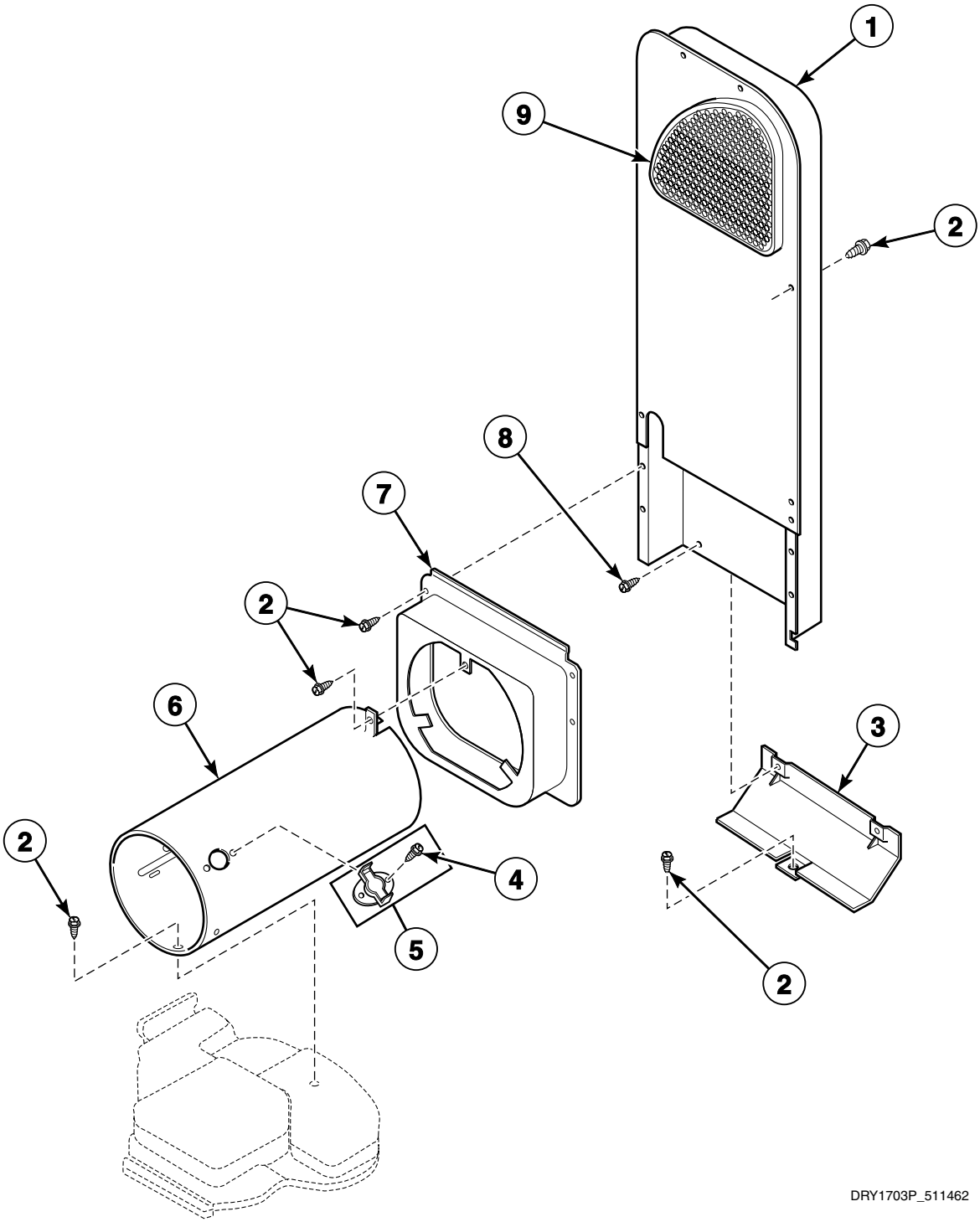

© Copyright, Alliance Laundry Systems LLC – DO NOT COPY or TRANSMIT

Heater Duct - Gas Models

REF	PART NO.	DESCRIPTION	COMMENTS
1	510025P	Heater Duct and Screw Assembly	Includes item 9
2	503661	Screw	
3	60952	Heat Duct Shield	
4	51782	Screw	
5	489P3	Thermostat and Plate Kit	Includes item 4
6	N/A	Combustion Duct	
7	510101	Heat Duct Shroud	
8	51780	Screw	
9	500820	Outlet Cover	

N/A = Part no longer available

© Copyright, Alliance Laundry Systems LLC – DO NOT COPY or TRANSMIT

Gas Valve, Igniter and Gas Conversion Kits

Gas Models

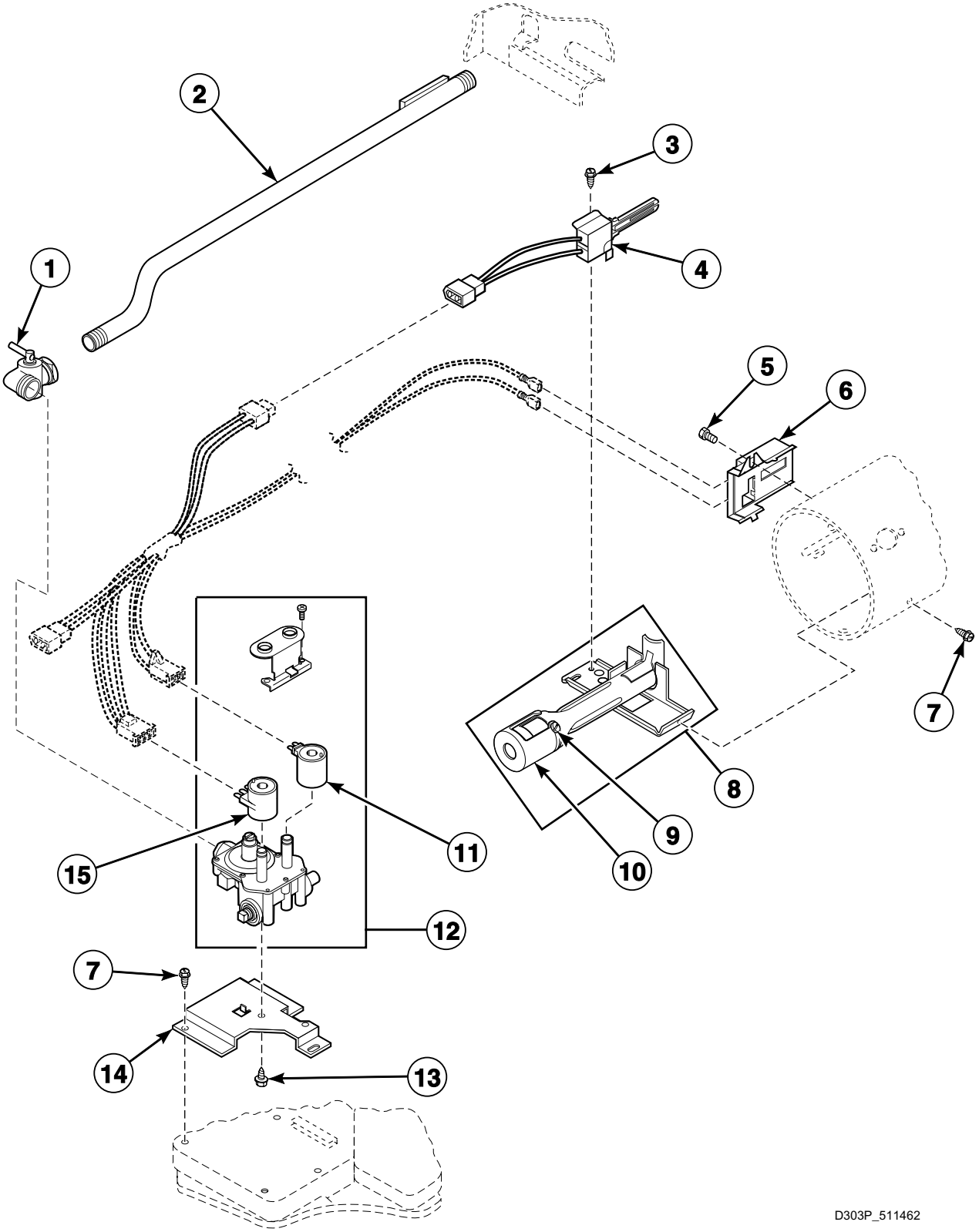

© Copyright, Alliance Laundry Systems LLC – DO NOT COPY or TRANSMIT

Gas Valve, Igniter and Gas Conversion Kits

REF	PART NO.	DESCRIPTION	COMMENTS
	458P3	L.P. Conversion Kit	Used to convert dryers from Natural Gas (N.G.) or Mixed Gas to Liquid Petroleum Gas (L.P.)
	459P3	N.G. Conversion Kit	Used to convert dryers from L.P. to N.G. or Mixed Gas
1	510205	Elbow Shut-Off Valve	
2	N/A	Lead-In Pipe Assembly	
3	56693	Screw	
4	510184P	Igniter and Bracket Assembly	
5	23222	Screw	
6	510213	Sensor	
7	503661	Screw	
8	510149P	Burner Assembly	
9	N/A	Screw	
10	N/A	Air Shutter	
11	58804B	Secondary Coil	60 Hertz; Model ZG1120-1102
	59063B	Secondary Coil	50 Hertz; All other models
12	60353	Gas Valve Assembly	N.G. or Mixed Gas; 60 Hertz; Model ZG1120-1102
	60443	Valve Assembly	N.G. or Mixed Gas; 50 Hertz; All other models
13	N/A	Screw	
14	510128	Gas Valve Mounting Bracket	
15	58804A	Booster and Holding Coil	60 Hertz; Model ZG1120-1102
	59063A	Booster and Holding Coil	50 Hertz; All other models

N/A = Part no longer available

© Copyright, Alliance Laundry Systems LLC – DO NOT COPY or TRANSMIT

Power Cord and Terminals

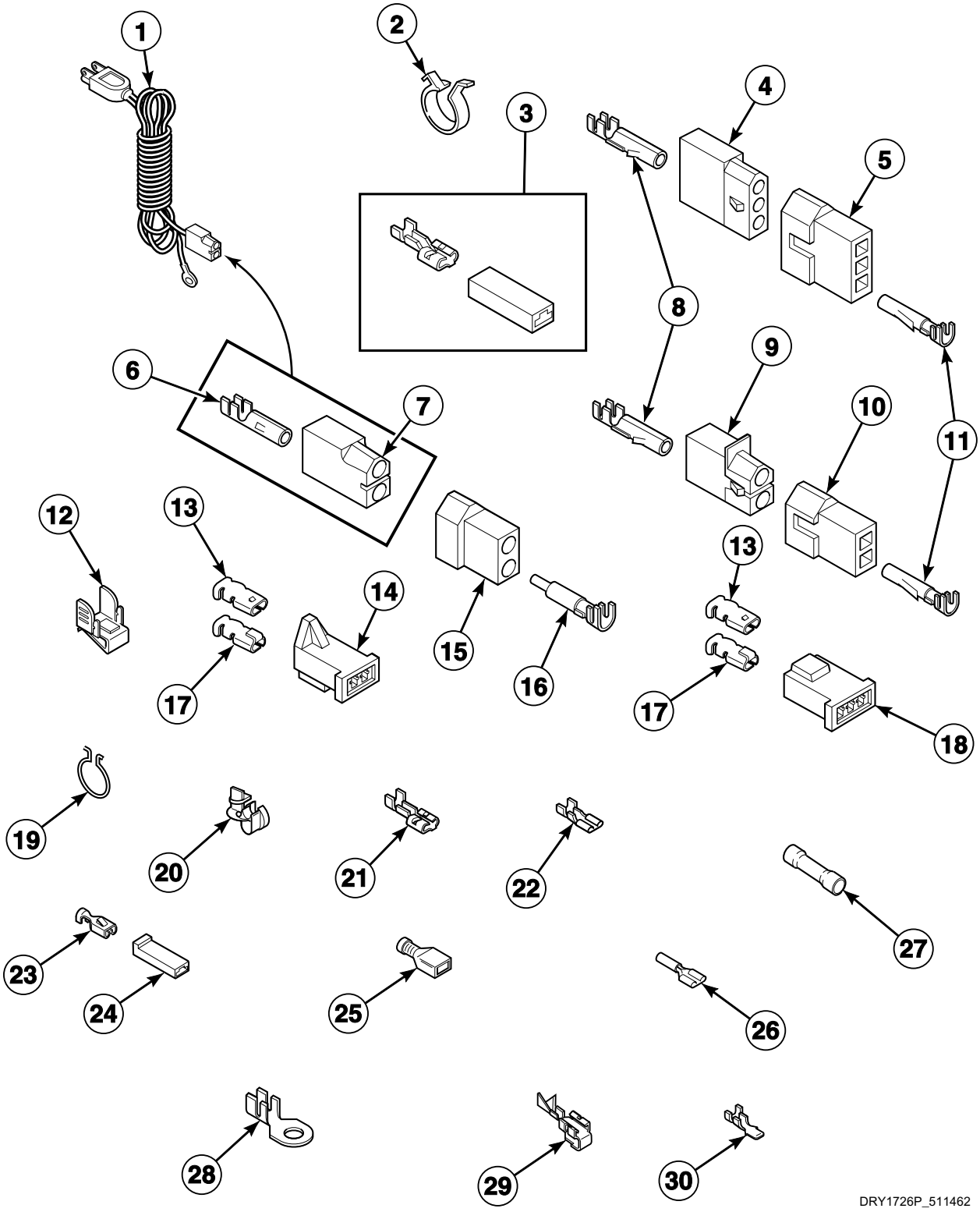

© Copyright, Alliance Laundry Systems LLC – DO NOT COPY or TRANSMIT

Power Cord and Terminals

REF	PART NO.	DESCRIPTION	COMMENTS
1	56222	Lead-In Cord	Gas models
2	504034	Wire Clip	
3	00360	Ultra Pod Terminal	1/4 inch; (1) 12 gauge wire or (2) 18 gauge wires
4	23039	3 Circuit Receptacle	
5	23040	Plug	
6	00130	Female Pin Terminal	
7	56265	2 Circuit Receptacle	
8	00117	Female Pin Terminal	
9	56451	2 Circuit Receptacle	
10	56448	2 Circuit Plug	
11	00116	Male Pin Terminal	
12	00161	Grounding Clip	
13	00189	Female Spade Terminal	
14	58799	2 Circuit Connector	
15	56266	2 Circuit Plug	
16	00127	Male Pin Terminal	
17	00361	Female Piggyback Terminal	
18	58800	3 Circuit Connector	
19	51291	Wire Clip	
20	38384	Strain Relief	
21	00245	Spade Terminal	1/4 inch; (1) 22 gauge wire
	00223	Female Spade Terminal	1/4 inch; (1) 18 gauge wire
	00121	Female Spade Terminal	1/4 inch; (2) 18 gauge wires or (1) 12 gauge wire
22	00124	Female Spade Terminal	3/16 inch; (1) 18 gauge wire; .020 tab
	00209	Female Spade Terminal	3/16 inch; (2) 18 gauge wires; .020 tab
	00156	Female Spade Terminal	3/16 inch; .032 tab
23	00115	Female Spade Terminal	(1) 18 gauge wire
	00321	Female Spade Terminal	(2) 18 gauge wires or (1) 12 gauge wire
24	90789	Receptacle Housing	
25	00165	Insulated Female Terminal	3/16 inch
	00359	Ultra Pod Terminal	1/4 inch
26	N/A	Pre-Insulated Spade Terminal	18 gauge
	00215	Pre-Insulated Spade Terminal	12 gauge
27	N/A	Butt Splice Connector	
28	00110	Ring Terminal	No. 10; (1) 18 gauge wire
	00111	Ring Terminal	No. 10; (2) 18 gauge wires or (1) 12 gauge wire
29	00114	Female Spade Terminal	
30	00139	Male Tab Terminal	1/4 inch; (1) or (2) 18 gauge wires or (1) 12 gauge wire

N/A = Part no longer available

© Copyright, Alliance Laundry Systems LLC – DO NOT COPY or TRANSMIT

Wire Harnesses and Wires

PART NO.	DESCRIPTION	COMMENTS
N/A	Wire Harness Assembly	
45001	18 Gauge Wire	Black; Order wire by foot; Order terminals and connectors as required.
45003	18 Gauge Wire	Brown; Order wire by foot; Order terminals and connectors as required.
45380	12 Gauge Wire	Orange; Order wire by foot; Order terminals and connectors as required.

N/A = Part no longer available

NOTE: Individual wires are not available separately. Order complete harness, or order wire by the foot. When applying terminals to wires, it is recommended that the terminals be soldered to the wires.

© Copyright, Alliance Laundry Systems LLC – DO NOT COPY or TRANSMIT

Parts Index

A

Access Cover Plate
60821 27
Access Door
60795W 19
Accumulator Replacement Kit
510628P 9
510629P 9
510630P 11
Air Duct Assembly
60786 21
Anti-Seize Compound
27604P 25

B

Blower Fan Assembly
510139P 25
Blower Housing and Cover Kit
511969P 25
Bolt
02505 ..... 5, 15
Booster and Holding Coil
58804A 43
59063A 43
Bumper Pad
56128 27
Burner Assembly
510149P 43

C

Clean Lint Label
502804 19
Coin Slide Extension
61031 5
Connector, 2 Circuit
58799 45
Connector, 3 Circuit
58800 45
Control Hood
502567L 13
502567W 13
Control Panel and Bracket Assembly
62645W 13, 15
Counter Kit
62113P 5
Cylinder Assembly
60645P 21
Cylinder Baffle
61027 21
61399 21
Cylinder Belt
511255 25
Cylinder Glide
61448 21
Cylinder Roller
56285 23

D

Disconnect Power Warning Label
505281 ..... 17, 27
Door Assembly
62300WP 19
Door Catch Assembly
510177 19
Door Liner
62152P 19
Door Pull
61925 19
Door Seal
61379 19
Door Strike
510181 19

E

Elbow Shut-Off Valve
510205 43
Electric Clearance Label
511005 27

F

Fabric Selector Switch
61512 ..... 13, 15
Female Piggyback Terminal
00361 45
Female Pin Terminal
00117 45
00130 45
Female Spade Terminal
00114 45
00115 45
00121 45
00124 45
00156 45
00189 45
00209 45
00223 45
00321 45
Foam Pad
32670 17
Front Panel Assembly
62420WP 19
Front Panel Seal
61380 19
Fuse Notice Label
61294 27

N/A items do not appear in index.

© Copyright, Alliance Laundry Systems LLC – DO NOT COPY or TRANSMIT

G

Gas Clearance Label
511004 ..... 19, 27

Gas Valve Assembly
60353 43

Gas Valve Mounting Bracket
510128 43

Grounding Clip
00161 45

H

Harness Replacement Kit
510534P 5
510661P 5

Harness Strap
55881 5

Heat Duct Shield
60952 ..... 37, 39, 41

Heat Duct Shroud
510101 41

Heater Duct and Screw Assembly
510025P 37, 39, 41

Heater Duct Assembly
500180P 37, 39

Heater Kit Assembly
61927 ..... 37, 39
61928 ..... 37, 39
61929 ..... 37, 39
61930 39
61931 39

Hinge
56045 19

Hood Back Plate
505798 13

Hood Wire Harness Assembly
61310 5

I

Idler Spring
510185 25

Idler Wheel and Bearing Assembly
510142P 25

Igniter and Bracket Assembly
510184P 43

Instruction Plate
500490 7
55969 5

Insulated Female Terminal
00165 45

L

Latch Relay
30616 15

Lead-In Cord
56222 45

Lead-In Cord Assembly
510505P 31, 35

Light
32464 ..... 13, 15
32519 13

Limit Thermostat
510701 39
56082 37

Lint Filter
61376P 21

Lock Plug
57916 15

L.P. Conversion Kit
458P3 43

M

Male Pin Terminal
00116 45
00127 45

Male Tab Terminal
00139 45

Meter Case and Funnel Kit
524P3W 5

Meter Case Gasket
26354 5

Meter Case Locking Bracket
30642 5

Motor
58044 25
58056 25

Motor Mount
510060 25

Motor Mount and Idler Assembly
511227 25

Motor Mount Clamp
510180 25

Motor Pulley Assembly
59884 25

N

Nut
Q6163 ..... 29, 31, 37
20274 27
20275 ..... 5, 7, 13, 15
23407 19
24205 ..... 13, 15
30647 5
51236 ..... 7, 19
52566 25
52947 ..... 13, 15
56156 ..... 23, 25
80077 5

N.G. Conversion Kit
459P3 43

O

Outlet Cover
500820 ..... 37, 39, 41

N/A items do not appear in index.

© Copyright, Alliance Laundry Systems LLC – DO NOT COPY or TRANSMIT

P

Panel Locator
56079 ..... 19, 27

Pawl Spring
53244 ..... 9, 11

Plug
23040 45

Plug, 2 Circuit
56266 45
56448 45

Pre-Insulated Spade Terminal
00215 45

R

Ratchet Wheel
53239 ..... 9, 11

Rear Bulkhead Assembly
61135P 23

Receptacle Housing
90789 45

Receptacle, 2 Circuit
56265 45
56451 45

Receptacle, 3 Circuit
23039 45

Relay
31738 15

Retaining Ring
23748 25

Ring Terminal
00110 45
00111 45

Rivet
26351 7

Rubber Foot
70282 27

S

Screw
M400664 23
Q6535 29
02916 ..... 7, 13
03203 ..... 5, 7
03950 5
20530 ..... 5, 17, 29, 31, 33, 35
22649 19
23222 ..... 15, 25, 37, 39, 43
23962 ..... 21, 25, 27
25232 21
33561 ..... 19, 21, 23, 25
39733 ..... 19, 27
501086 ..... 7, 13, 15
501285 ..... 33, 35
503661 ..... 5, 17, 19, 21, 23, 25, 27, 29, 31, 33, 35, 37, 39, 41, 43
503673 5
51778 7
51780 ..... 5, 23, 25, 37, 39, 41
51782 41
52696 27
52864 ..... 13, 15, 19
52909 23
56693 ..... 39, 43
57444 19
61199 ..... 33, 35
62541 25
62588 ..... 21, 31
80399 15

Seal
56065 25

Seal Assembly
56088 ..... 21, 23

Seal Strap
56090 ..... 21, 23

Secondary Coil
58804B 43
59063B 43

Sensor
510213 43

Service Door Assembly
35798L 5
35798W 5

Shaft
56461 25

Snap Switch
61468 11

Spade Terminal
00245 45

Speed Clip
28835 19

Spring
52310 ..... 21, 23
53261 ..... 9, 11

Strain Relief
38384 45

Support Barrel
56534 19

Switch
504570 19

Switch Assembly
55882 ..... 13, 15

Switch Knob
39897 ..... 13, 15

T

Temperature Selector Switch
56576 ..... 13, 15

Terminal Block Assembly
50854A 29, 31
510190P 33, 35

Terminal Block Shield
56087 ..... 29, 31, 33, 35

Thermal Fuse Kit
490P3 39

Thermostat
503552 25
56470 25
57015 25
57239 ..... 37, 39
61556 25

N/A items do not appear in index.

© Copyright, Alliance Laundry Systems LLC – DO NOT COPY or TRANSMIT

Thermostat and Plate Kit
489P3 41
Thermostat Heater
61622 25
61623 25
Thin Pad
58049 21
Timer
58636 7
Timer Case Assembly
37733W 7
Timer Knob
54678 7
Timer Motor
512017P 9, 11
Timing Cam
53240 ..... 9, 11
53241 ..... 9, 11
53242 ..... 9, 11
53243 ..... 9, 11
Top Brace
56486 17
Top Kit
505863WP 17

U

Ultra Pod Terminal
00359 45
00360 45

V

Valve Assembly
60443 43

W

Warning/Caution Label
500281 19
Washer
02431 ..... 5, 7, 13, 15
03815 ..... 31, 35
20279 ..... 7, 23
20492 25
21147 19
21734 ..... 5, 7
30627 5
35774 5
35917 5
51474 ..... 23, 29, 31
52549 25
56552 ..... 29, 31, 37
91176 ..... 13, 15
Wire Clip
504034 45
51291 45
Wire, 12 Gauge
45380 46
Wire, 18 Gauge
45001 46
45003 46

N/A items do not appear in index.

© Copyright, Alliance Laundry Systems LLC – DO NOT COPY or TRANSMIT